Invitation for Bids

for

Three Vehicle Garage
at the Sterling Senior Center

IFB

For

Three Vehicle Garage
at the Sterling Senior Center
36 Muddy Pond Rd. Sterling, MA

In order to receive bid addendums or other updates (such as a site visit reschedule) all interested bidders should register by sending an email to faponte@sterling-ma.gov.

The Town of Sterling a will be accepting bids for the site preparation and construction of 40ft by 44ft three vehicle garage

Work at this site is complete and the parking area is paved. The building in the center of the picture is the Senior Center. The red box represents the approximate location of the proposed garage.

The Town of Sterling proposes to build a 40ft X 44ft garage at the edge of the Senior Center parking lot. The building will house two small buses and an all-electric automobile. There will be a 9ft X 44ft storage room included in the building at the back of the three bay vehicle area.

The building will have basic electrical service included in this project. No heat, plumbing or gas is planned as the building will not be used for anything other than as a vehicle garage and storage.

A pre-bid conference – **site visit is planned for 10:00 AM Wednesday October 21, 2020**

Bids are due on or before at 2:00 PM on Thursday November 5, 2020, delivered to Fred Aponte, Operations Manager at the Mary Butterick Building at 1 Park Street, Sterling, MA 01564. Bid opening will occur at that time and place in room 205.

Instructions to Bidders:

1. Project Name and Location: **Three Vehicle Garage at the Sterling Senior Center, 36 Muddy Pond Rd. Sterling, MA**
2. This document contains instructions to bidders for the project named above. This bidding document is part of the Contract Documents.
3. To obtain digital copies of the bidding documents and drawings

   contact:

   Kama Jayne, Senior Executive Assistant
   Town of Sterling
   1 Park Street
   Sterling, MA. 01564
   (978) 422 8111 ext. 2316
   or
   https://www.sterling-ma.gov/
   Select "Bid Opportunities"

   Paper Copies of the Documents are not available

4. Submission of four (4) paper copies and one (1) digital copy of all bid files in .PDF format on a USB memory stick or CD on before the time and date below. Late submissions will not be considered. Submit bids in sealed and labeled envelopes with the project name and bidder's name on the outside of the envelope. Mark the envelope: "Bid Enclosed - Do Not Open". Any exceptions to the bid must be clearly marked, defined and listed on a separate sheet of paper marked bid exceptions.

Submit bid To: Fred Aponte, Operations Manager

Town of Sterling
1 Park Street
Sterling, MA. 01564

Date and Time of Day **Bids are due: Thursday, November 5, 2020, 2:00 PM**

5. Bids will be opened in public, Bidders may be present. Bids may not be withdrawn for 30 calendar days after receipt of bids. Announcements of bid results will be made within 30 days after receipt of bids.

6. A bid security (bid deposit) is required in the amount of Five percent)(5%) of the bid. Bid security must be in the form of an AIA A310 bid bond, certified check, or cashier's check made payable to the Owner. Bid security will be forfeited if a bidder who has been awarded the contract fails to execute the Owner/ Contractor Agreement within 10 days of notification by Owner. Bid security for unsuccessful bidders will be returned no later than 30 days after the contract is first awarded.

    a. A Payment Bond is required. Each bidder shall submit evidence of bond ability for the entire value Fifty percent (50%) of the work or One Hundred Percent (100%) if the project is over $150,000. Bonds must be executed by a surety company licensed to do business at the location of the project.

    b. If the project quote is over $150,000, a Performance Bond of One Hundred Percent (100%) is required

    c. Oral, written, or email modifications to bids will not be considered. Modifying or qualifying statements of any kind shall be on a separate sheet and submitted in the same envelope with the bid.

    d. The Owner reserves the right to reject or accept any or all bids. The Owner reserves the right to waive any alleged breach of technicality.

    e. The Owner reserves the right to modify the Contract Documents and rebid the project, if necessary, to meet Owner's budgetary requirements.

    f. Questions: During the bidding period, submit questions to the person named below. Questions will be answered in writing and copies distributed to bidders of record.

Fred Aponte Operations Manager 1 Park Street Sterling, MA 01564 978-422-8111 ext 2318	and	Jay Ferrera President J Ferrera Associates 978-407-8848

g. A pre-bid meeting will be held: Wednesday September 30 at 10:00 at the Sterling Senior Center, 36 Muddy Pond Rd. Sterling MA

h. Site Visit: Additional site visits by bidders must be scheduled in advance. Contact the Operations Manager named above to arrange to visit the site.

Scope of Work

i. The existing storage shed will be removed by others before the garage project begins

j. All State and Local buildings codes apply and be used for any aspect of this project without specific requirements

k. The garage area is at the corner of the parking lot for very active Senior Center and within walking distance from an elementary school. All work at the garage site must be coordinated with the Director of the Senior Center, including the location for contractor's equipment and material storage. The construction site must adequately secured to project curious school children.

l. Remove any top soil, add gravel and compact area in preparation of footings and concrete floor.

m. Reference the site plans titled: "Proposed Garage Building for Senior Center in Sterling Massachusetts"" prepared by Whitman & Bingham Associates dated February 17, 2020.

n. Reference the design plans titled: "Sterling Senor Center, garage – 36 Muddy Road" prepared by J Ferrera Associates Inc. dated 7/21/20 and 7/28/20

o. Roof shingles and building siding and trim materials and colors to match the Sterling Senior Center building.

p. Misc. comments:

    a. Truss design needs to certified by the provider

    b. Garage floor should have 1/8th inch slope/pitch towards the vehicle doors

    c. No slope/pitch for the storage room floor.

    d. Only the storage room and partition wall has sheet rock. The garage side of the partition wall doesn't have sheet rock.

e. Quote as an Ad Alternate adding insulation and sheet rock to three remaining l garage walls. Same specifications as the storage room and partition wall.

q. Contractor to arrange temporary AC power. Power to a parking lot light is nearby.

INSTRUCTION TO BIDDERS AND GENERAL SPECIFICATIONS

For

Three Vehicle Garage
at the Sterling Senior Center
36 Muddy Pond Rd. Sterling, MA

SECTION I. GENERAL SPECIFICATIONS

Article 1. Acceptance or Rejection of Bids

1.1 Town of Sterling, Massachusetts acting through its Board of Selectmen (Owner) reserves the right to reject any or all Bids and to accept any bid in whole or in part which it considers to serve the best interest of the Owner.

1.2 Any Bid which is not according the prescribed form, not properly signed, or otherwise contrary to instruction or is conditional may be rejected by the Owner.

1.3 More than one Bid from the same Bidder whether or not the same or different names appear on the signature page shall not be considered. Reasonable proof for believing any Bidder is interested in more than one Bid shall cause the rejection of Bids made by such Bidder directly or indirectly.

1.4 Any or all Bids shall be rejected if there is reason to believe that collusion exists among the Bidders.

Article 2. Mailing or Delivery of Bids

2.1 Bids which are mailed or delivered should be addressed to Fred Aponte, Operations Manager, 1 Park Street, Sterling, MA 01564.

2.2 Regardless of the cause of delay, no Bids which are received by the Owner after the terminal time shall be given any consideration. The Bidder is responsible for filing the Bid before the terminal time on **Thursday November 5, 2020 at 2:00 PM.**

2.3 Each Bidder shall provide a security in form of a bid bond, payment and performance bond as specified in cash, certified check, treasurer's or cashier's check, or security bond.

Article 3. Identification of Sealed Envelopes

3.1 Bids shall be placed in sealed envelopes that are marked appropriately on the outside with the name and address of the Bidder, the title of the Bid (Senior Center Garage

Project) and the scheduled date for the opening of Bids. No responsibility will be attached to the Owner or Owner's staff for the premature opening of Bids that are not properly identified. After the terminal time, Bids become the property of the Owner.

Article 4. Bid Forms

4.1 Four (4) paper copies and **one (1) digital copy** of all bid files in .PDF format on a USB memory stick or CD of the 'Bid Form' and required documents (attached) shall be submitted as a means to avoid errors, misconceptions or ambiguities.

Article 5. Bid Prices

5.1 Bid quotations submitted on the Bid Form shall remain firm for a period of 6 (Six) months after the time set for the opening of Bids. A Bid Award will be made by the Owner within 30 days (Saturdays, Sundays, and legal holidays excluded) of the Bid Opening. The bid award is subject to appropriation of funds from a previous Town Meeting.

5.2 The bid price shall represent full compensation for all labor, materials, and equipment required to complete the Work in the January 2021 to March 2021 time frame. The bid price or prices shall be written both in numbers and words.

5.3 The selected Contractor will be exempt from the payment of state sales tax for all labor, materials, and equipment furnished to the Owner under this Contract. The Bidder's prices should reflect this exclusion. The Contractor shall complete all necessary forms for issuance of an exemption form for this contract work as may be necessary to secure the state tax exclusion.

Article 6. Signatures on the Bid Forms

6.1 If a Bid is submitted by an individual, the full name and post office address of this person shall be designated.

6.2 If a Bid is submitted by a firm or partnership it shall be signed by a person having the legal authority to execute such a document on behalf of the Bidder. The person signing the Bid Form shall then indicate his or her title or position in addition to the full name and address of the firm or partnership.

6.3 If a Bid is submitted by a corporation it shall state the name and title of the official or officials of the corporation by whom the contract can be legally signed, and be accompanied by a copy of the corporate vote granting the authority, certified by the clerk of said corporation.

Article 7. Modification of Bid

7.1 No modification of any Bid will be considered by the Owner unless received by the Owner prior to the time established for the opening of bids. No conditional Bids will be accepted.

Article 8. Withdrawal of Bid

8.1 Any Bid may be withdrawn on written request dispatched by a Bidder in time for delivery in the normal course of business prior to the hour fixed for the opening of Bids.

Article 9. Subletting of Award

9.1 No subletting of the Award, nor assignment of moneys due or to become due, shall be made without written consent of the Owner. In the event of consent by the Owner for subletting of the Award, the Contractor remains fully responsible for all Work completed by the subcontractor and for adherence to the terms and conditions of this contract.

Article 10. Breach of Contract

10.1 Where the Contractor fails to provide the labor, materials, and equipment as specified, the Owner reserves the right to terminate the Contract and enter into other agreements to complete the Contract and the Owner shall nevertheless have the right to recover damages for breach of Contract and/or loss incurred, whether by suit on the Contract, by claim on the bond securing it or as otherwise available to the Owner.

Article 11. Protection of Owner's Property

11.1 The Contractor shall maintain adequate protection of the Owner's property and that of its residents from any harm arising in connection with the services provided and shall pay or cause payment to be made for any such damages incurred.

Article 12. Changes in the Project

12.1 The Owner, without invalidating the essence of the prevailing Contract, may order the inclusion of extra labor, materials, and equipment or the adoption of changes within the context of the Contract, with appropriate adjustments for payments being made. The appropriate adjustments for payments in the contractual agreement shall be in the form of a Change Order.

Article 13. Permits and Licenses

13.1 The Contractor shall secure at Contractor's own expense all permits and licenses, pay all necessary charges, and provide all notices due in connection with the proper completion of the Work. The Town of Sterling waives all local permit fees.

Article 14. Liens, Demands and Permit Fees

14.1 The Contractor shall indemnify, defend and save the Owner harmless from all liens, demands, or permit fees in any way associated with the proper completion of the Work, which shall be furnished free and unencumbered of any charge against it.

Article 15. Description of Work

15.1 Each Bidder shall carefully examine the information available regarding the required Work and all conditions which may affect proper execution of the Work. The purpose of this Contract is to provide the Owner with labor, materials, and equipment to complete the Work as detailed in these Contract Documents in accordance with all applicable federal, state and local statutes, laws, and regulations. A pre-bid conference and site visit will be scheduled. All interested contractors are encouraged to attend and notify the Operations Manager ahead of time in case the site visit must be rescheduled. No claims for additional costs will be allowed because of lack of knowledge of the existing conditions. The Bid shall include all labor, materials, and equipment to complete this Work as specified.

Article 16. Bidder Responsibilities

16.1 Through submission of a bid, the Bidder attests and agrees to the following:

16.1.1 Each Bidder shall attest that the Bidder has carefully examined the Contract Documents and that the Bidder agrees to enter into a written contract with the Owner to provide this Work in accordance with the Contract Documents.

16.1.2 The successful Bidder shall be responsible for the preparation and filing of any reports required by the local regulations, by-laws, and laws of the Commonwealth of Massachusetts and/or federal government.

16.1.3 Each Bidder must meet the following minimum criteria and must provide this information with its Bid.

i. The Bidder has not been cited by any city, town, state, or any federal agency during the past 2 years for violations related to occupational safety and/or environmental pollution regulations and/or laws. If a Bidder has been cited for any violation, Bidder must disclose in its Bid the nature of the violations which will be used to determine whether the Bidder is responsible.

ii. Each bidder shall submit references which shall be attached with the Bid.

Article 17. Bidding on Contract Documents

17.1 Each Bidder shall Bid on identical Contract Documents and any Bidder proposed variations shall not be allowed without the written consent of the Owner.

Article 18. Bid

18.1 Each Bidder shall include all charges for labor, materials, and equipment.

18.2 The Owner reserves the right, in its absolute and sole discretion, to waive any informality in or to reject any or all Bids if deemed to be in its best interest.

18.3 All questions by prospective bidders as to the interpretation of the Contract Documents must be submitted in writing to Fred Aponte, Operations Manager, 1 Park Street, Sterling, MA 01564, at least 7 days before the date and time set for the opening of bids. The Owner reserves the right to issue up to 3 days before bids are due any and all interpretations and addenda via mail or email as it deems appropriate and expedient. All Bidders shall ensure that such contact information is on file and remains current with the Owner throughout the Bid process.

Article 19. Bid Evaluation Criteria

19.1 Does the Bidder meet the minimum criteria?

19.2 Is the Bid proposal responsive to the specification requirements?

19.3 Is the Bidder a responsible Bidder?

19.4 Does the Bidder provide references and have a minimum of 5 years of experience with building similar structures for municipal customers?

19.5 Does the bidder propose an installation and completion schedule that is compatible with the Senior Center schedule?

19.6 Description of their site preparation and quality assurance process.

19.8 Does the Bidder provide the lowest price for the contract bid on?

Article 20. Bid as Town Property

20.1 Bids and information prepared by each Bidder shall become the property of the Owner.

Article 21. Compliance with other Laws and Regulations

21.1 The Contractor must comply with all federal, state, and local laws and regulations including **Prevailing Wages** pertaining to the Work.

Article 22. Insurance

22.1 The Contractor shall carry Workers' Compensation and Liability Insurance for work under this proposal and shall render an in-effect insurance certificate to the Owner within 10 days of the award letter. Insurance limits shall be in accordance with the below requirements.

22.2 Minimum Limits of Liability:

22.2.1 Comprehensive General and Public Liability Insurance in an amount not less than $1,000,000 per occurrence and in an amount not less than $3,000,000 aggregate.

22.2.2 Bodily Injury Insurance covering the operation of all motor vehicles owned by the Contractor, in the amounts of $1,000,000 for any one person, $3,000,000 for any one accident.

22.2.3 Property Damage Insurance covering the operation of all motor vehicles owned by the Contractor, in the amounts of $1,000,000 for any one accident, $3,000,000 aggregate.

22.2.4 Motor Vehicle Insurance to cover bodily injury and property damage resulting from the use of motor vehicles not owned by the Contractor, while such vehicles are being operated in conjunction with the prosecution of the Work under this contract, in the amount required under b) and c) above.

22.2.5 Worker's Compensation and Employer's Liability as required by the General Laws of the Commonwealth of Massachusetts.

22.3 All policies shall be so written that the certificate holder, namely the "Town of Sterling, 1 Park Street, Sterling, MA 01564" is insured at no cost to the Town for the full amounts stated above.

22.4 The Contractor shall name the Owner as an additional insured.

Article 23. Certificate of Non Collusion

23.1 Each Bidder shall submit a certificate of non-collusion which is attached with the Bid Form.

Article 24. Certificate of Taxes

24.1 Each Bidder shall submit a certificate of taxes which is attached with the Bid Form.

Article 25. Statement of Eligibility

25.1 Each Bidder shall submit a statement of eligibility which is be attached with the Bid Form.

Article 26. Hold Harmless Clause

26.1 The Contractor shall indemnify, hold harmless and defend the Owner, its agents, employees, officers, engineers, and volunteers from and against any and all liabilities, claims, penalties, fines, forfeitures, suits, administrative proceeding, and all incidental costs and expenses (including costs of defense, settlement, and reasonable attorney's fees) which may be alleged against the Owner, or which the Owner may incur, become responsible for, or pay out as a result of death or bodily injury to any person, destruction or damage to property, contamination of or adverse effects on the environment, or any violation or alleged violation of governmental laws, regulations or orders caused by or resulting from the negligent acts or omission by the Contractor or of any employee or agent of the Contractor or from the failure or inadequacy of the equipment.

Article 27. Award of Contract

27.1 The Contact will be awarded to the lowest responsible eligible Bidder, subject to appropriation, reference verification, and schedule compatibility. Such award may be made by the Town of Sterling. Such a Bidder shall possess the skill, ability and integrity necessary for the faithful performance of the Work. The term "lowest responsible and eligible Bidder" shall mean the Bidder whose bid is the lowest of those Bidders possessing the skill, ability and integrity to the faithful performance of the Work as outlined in Article 19.

27.2 The Owner reserves the right to reject any and all Bids at its sole discretion for any reason whatsoever, to waive any and all informalities if it is in Owner's best interest to do so, and the right to disregard all nonconforming, nonresponsive or conditional Bids.

Article 28. Contractor's Guarantee

28.1 The Contractor guarantees that the Work to be performed under the Contract and all labor, materials and equipment to be furnished, used, or installed in the performance of the Work shall be free from defects and flaws, and shall be performed and furnished in strict accordance with the Contract Documents. The minimum guarantee shall be for a period of one (1) year from and after the date of completion and acceptance of the Work.

28.2 If at any time within the period of guarantee any part of the Work requires repairing, correction or replacement, the Owner may notify the Contractor in writing to make the required repairs, correction or replacements. If the Contractor fails to commence making such repairs, corrections or replacements to the satisfaction of the Owner within 20 days from the date of receipt of such notice, or having commenced fails to prosecute such Work with diligence, the Owner may employ other persons to make said repairs, correction or replacements, and charge the costs, including compensation for additional professional services, legal or otherwise to the Contractor and/or its surety bond company.

Article 29. Liquidated Damages

29.1 Owner and Contractor recognize that time is of the essence of these Contract Documents due to the need schedule other activities in this area and that Owner will suffer financial loss if the Work is not completed within the Contract Period ending after 60 calendar days from the start date fixed in the Notice to Proceed. In addition, specific items or portions of the Work detailed within the Bid may require accelerated sequencing and other stipulated completion dates. They also recognize the delays, expense and difficulties involved in proving, in a legal proceeding, the actual loss suffered by Owner if the Work is not completed on time. Accordingly, instead of requiring any such proof, Owner and Contractor agree that as liquidated damages for delay (but not as a penalty) Contractor shall pay Owner $200.00 per day for each calendar day of delay until the Work is complete as stipulated in the Contract Documents.

Article 30. Safety and Health Regulations

30.1 This Work is subject to all of the Safety and Health Regulations of the U.S. Department of Labor set forth in Title 29 Code of Federal Regulations, Part 1926 and to all subsequent amendments and to the Massachusetts Department of Labor and Industries, Division of Industrial Safety "Rules and Regulations for the Prevention of Accidents in Construction Operations" (Chapter 454 Code of Massachusetts Regulations 10.0 et. seq.) and M.G.L. c. 30, § 39S. Contractors shall be familiar with the requirements of these regulations and statutes.

30.2 The Contractor shall comply with the Department of Labor Safety and Health Regulations for Construction promulgated under the Occupational Safety and Health Act of 1970 (PL-91-596) and under Section 107 of the Contract Work Hours and Safety Standards Act (PL-91-54). The Bidder shall have a competent person or persons, as required under the Occupational Safety and Health Act, on the project site to inspect the Work and to supervise the conformance of the Work with the regulations of the Act.

30.3 The Contractor (1) shall be able to furnish labor that can work in harmony with all other elements of labor employed or to be employed in the Work; (2) shall ensure that all

employees to be employed at the worksite will have successfully completed a course in construction safety and health approved by the United States Occupational Safety and Health Administration (OSHA) that is at least 10 hours in duration at the time the employee begins work and who shall furnish documentation of successful completion of said course with the first certified payroll report for each employee; and (3) shall ensure that all employees to be employed in the Work subject to this Bid have successfully completed a course in construction safety and health approved by OSHA that is at least 10 hours in duration. All employees to be employed in the Work subject to this Bid shall be legally able to work in the Unites States. At least one person of Contractor authority must be on site and able to speak English.

SECTION II. SUMMARY OF WORK

Article 1. Bid Alternatives

1. Alternate 1: Quote to fully insulate the three garage walls. (The storage room insulation and sheet rock is part of the base bid.)
2. Alternate 2: Quote to fully sheetrock the three walls of the garage

Article 2. Bidder Obligation

3.1 The Bidder shall declare that the Bidder carefully examined the Contract Documents and that the Bidder proposes and agrees to enter into a written contract with the Owner to provide the labor, materials, and equipment in accordance with these Contract Documents.

3.2 The Owner shall have the right to terminate the services of the Contractor at any time during the period of the contract for any reason with 30 days' notice. The Owner shall be responsible for any bills owed to the successful bidder only until the date of termination and only for satisfactory delivery of labor, materials, and equipment and shall not be responsible for any additional fee or charges.

Article 4. Obligations of the Owner

4.1 The Owner will provide adequate access to the garage area during the hours of 7:00 AM and 5:00 PM, Monday through Friday, except legal holidays. This site is in the Senior Center parking lot located in residential area and adjacent to public school. Noise and dust must be controlled and minimized to avoid impact to abutters. The Owner is flexible to different work hours as long as they coordinated with the Senior Center Director.

Article 5. Obligations of the Contractor

5.1 The Contractor shall schedule its work in such a way as to not leave the Work for any period of time greater than 2 days, excluding weekends and holidays, and inclement weather once it has begun the Work until all of the Work is complete.

5.2 The Contractor shall communicate schedule and work plan with the Operations Manager and Senior Center Director and pull applicable permits from the Building Department. Permit fees will be waived by the Owner.

5.3 If the General bid price is more than $150,000, DCAMM Certification is required.

Article 6. Prevailing Wage Rates

6.1 Wages paid on the Work must conform with the minimum rate of wages as established by the Commissioner of Labor and Workforce Development, Division of Occupational Safety under the provisions of M.G.L. c. 149, §§ 26-27. Prevailing Wage Rates are attached as part of these Contract Documents.

6.1.1 In accordance with M.G.L. c. 149, § 27B, a true and accurate record must be kept of all persons employed on the Work for which the enclosed rates have been provided.

6.1.2 M.G.L. c. 149, § 27B includes the following requirements:

6.1.2.1 Employers shall submit weekly payroll records to the awarding authority for all employees who have worked on this project. Such records should be submitted with each invoice presented for payment.

6.1.2.2 Responsibility for investigating and enforcing the prevailing wage law is with the office of the Massachusetts Attorney General.

Article 7. Contract Bonds

7.1 Bidders must submit a five percent (5%) bid deposit with their bids. The bid deposit may be in the form of a certified, treasurer's or cashier's check from a responsible bank or trust company payable to the awarding authority; cash; or a bid bond from a surety company.

7.2 The successful bidder shall be required within 7 calendar days, after the Notice of Award and the contract is mailed, to furnish a Fifty Percent (50%) or One Hundred 100% Payment Bond and 100% Performance Bond if the bid price is over $150,000 The bond(s) shall be submitted in a form approved by the Owner and issued by a responsible surety company satisfactory to the Owner and qualified to do business under the laws of the Commonwealth of Massachusetts. Such Bond(s) shall be deemed a part of the

Contract, and shall be in the full amount as stated above. This Bond shall remain in effect at least until one year after the date when final payment becomes due.

Article 8. Hours of Work

8.1 Work under this Contract shall be performed only during the hours of 7:00 AM and 5:00 PM, Monday through Friday, legal holidays excluded, unless otherwise authorized in writing by the Operations Manager or the Senior Center Director.

Article 9. Payment & Invoicing

9.1 Upon receiving an invoice from the Contractor after the Work has been completed in accordance with the milestones in the Contract Documents the Owner shall make payments for the Work completed to date per the following payment schedule.

Project Milestones:

a. Sub base preparation, footings and concrete floor _20%_____

b. Rough framing of exterior and partition walls _25%____

c. Roof trusses, underlayment, and shingles _20%_____

d. Siding, doors and windows _10%_____

e. Project close out Final acceptance _25%_____

Article 10. Inspection

10.1 The Town will inspect the completed Work; and if the Work is deemed unsatisfactory, the Contractor shall make the needed changes at no cost to the Owner.

SAMPLE

AGREEMENT FOR
Three Vehicle Garage
at the Sterling Senior Center
36 Muddy Pond Rd. Sterling, MA

AGREEMENT between the Town of Sterling, a Massachusetts municipal corporation with a usual place of business at Butterick Municipal Building, 1 Park Street Sterling Massachusetts, acting through its Board of Selectmen (the "Owner"), and _____, a Massachusetts [foreign] corporation doing business at _____ (the "Contractor").

WHEREAS:

A. The Owner issued a IFB pursuant to M.G.L. c. 149 s 44A – 44J for Vehicle Garage Project at 36 Muddy Pond Road Sterling, Massachusetts (the "Work"); and

B. The Contractor submitted a Bid to perform the Work, and the Owner has decided to award the contract to the Contractor;

NOW THEREFORE, in consideration of the following mutual covenants, the parties agree as follows:

1. The Contractor shall provide the Owner the Work as delineated in the following:

   Three Vehicle Garage at the Sterling Senior Center 36 Muddy Pond Rd. Sterling, MA

   in accordance with the Invitation for Bids and the Specifications.

2. Payment. The Owner agrees to pay to the Contractor a not-to-exceed sum of $_____.

3. Invoices. The Contractor shall submit a milestone based invoices to the Owner for payment for the Work. The Owner shall make payments within 30 days after its receipt of the invoice for Work completed in accordance with these Contract Documents.

4. Contract Documents. The Contract Documents consist of this Agreement, the Invitation For Bids, Instruction to Bidders and General Specifications, Technical Specifications and Summary of Work, the Bid, Prevailing Wage Rates, and all addenda issued prior to execution of this Agreement, and which shall constitute the Contract Documents between

the Owner and the Contractor, except for modifications issued after execution of this Agreement. In the event of conflicting provisions, the language of these Contract Documents shall govern, provided that, if the conflict relates to quality of services, the higher quality specified shall be required.

5. Contract Period. The Contractor agrees to commence its obligation forthwith upon notification of a Notice to Proceed by the Owner and to complete its obligation under this Contract immediately, within 60 (sixty) calendar days from the start date fixed in the Notice to Proceed, time being of the essence. Start date:_____ Completion date: _____

6. Claims. The Contractor shall be responsible for and pay all claims for damages resulting from failure to furnish such services as provided by the Contract Documents.

7. Laws. These Contract Documents are made subject to all applicable laws of the Commonwealth of Massachusetts; and if any provision of these Contract Documents does not conform to said laws, such provision of the Contract Documents shall be void and the applicable provision of such laws shall be operative. Any suit shall be filed in the Worcester County.

8. Performance of the Work. The Contractor shall furnish all labor, materials, and equipment to accomplish the Work in strict conformity with all applicable federal, state, and local laws, each of which is incorporated by reference and shall be responsible for obtaining all necessary approvals/permits as required for the performance of the Work.

9. Warranties. The Contractor guarantees that the services provided are fit for the purpose for which they are being purchased. The Contractor warrants that all Work will be performed in a good and worker-like manner and in strict conformity with the Contract Documents. The Contractor shall make good, without cost to the Owner, any defects or faults arising within (a minimum of) 1 year after the date of the Owner's acceptance of the Work resulting from imperfect or defective services furnished by the Contractor.

10. Indemnification of the Owner. The Owner's liability shall be limited to the amounts due the Contractor for services actually rendered. The Contractor shall indemnify, defend, and hold harmless the Owner its officers, boards, agents, and employees from any liability, loss charge, or expense resulting from any employees or third-party contractor or supplier's claim for payment for wages, labor, materials, equipment, goods or services rendered to the Contractor or from any claim for injury to person or property, which may be made as a result of any act, omission or default on the part of the Contractor or any of its agents or employees, and will pay promptly on demand all costs and expenses of the investigation thereof, including attorney's fees and expenses. If any such claim is made, the Owner may retain out of any payments, then or thereafter due to the Contractor, a sufficient amount to protect the Owner against such claims, costs, and expenses.

11. Contractor's Standard of Care. The Contractor shall perform its services and obligations hereunder in conformity with the standard of professional skill and care applicable to

established providers of such services. The Contractor warrants and represents that it is familiar with the services relative to this Work.

12. Contractor's Personnel. The Contractor shall utilize only its employees and shall not utilize any third-party contractors without prior written approval of the Owner. All Contractor's employees must be legally authorized to work in the United States. Contractor will insure a supervisor is onsite at all times and able to speak English.

13. Insurance. The Owner requires that the Contractor provide a Certificate of Insurance, indicating evidence of General Liability, Automobile Liability with minimum limits of $1,000,000.00, all as set forth in the Specifications, and Worker's Compensation in accordance with the General Laws. The Owner requires the Certificate of Insurance to include naming the Owner as an additional insured.

14. Independent Contractor. The Contractor is an independent contractor and is not an agent or employee of the Owner and is not authorized to act on behalf of the Owner. The Owner will not withhold federal, state or payroll taxes of any kind on behalf of the Contractor or the employees of the Contractor. The Contractor is not eligible for, and shall not participate in, any employee pension, health, or other fringe benefit plans of the Owner.

15. Successors. These Contract Documents is binding upon the parties and their successors. Neither the Owner nor the Contractor shall assign or transfer any interest in these Contract Documents without the written consent of the other.

16. Inspection and Reports. The Owner shall have the right at any time to inspect the records of the Contractor relative to services provided to the Owner pursuant to these Contract Document. Upon request, the Contractor shall immediately furnish to the Owner any and all written reports relative to such services arising out of its operations under these Contract Documents during and/or after the termination of these Contract Documents.

17. Termination.

    a. For Cause. The Owner shall have the right to terminate these Contract Documents:

       (i) if the Contractor neglects or fails to perform or observe any of its obligations and a cure is not effected by the Contractor within 7 days next following its receipt of a notice of breach, non-performance, or poor performance issued by the Owner; (ii) if an order is entered against the Contractor approving a petition for an arrangement, liquidation, dissolution or similar relief relating to bankruptcy or insolvency and such order remains unvacated for 30 days; or (iii) immediately if the Contractor shall file a voluntary petition in bankruptcy or any petition or answer seeking any arrangement, liquidation, or dissolution relating to bankruptcy, insolvency, or other relief for debtors, or shall seek or consent or acquiesce in appointment of any trustee, receiver or liquidation of any of the

Contractor's property.

The Owner shall pay all reasonable and supportable costs incurred prior to termination, which payment shall not exceed the value of services provided.

b. For Convenience. The Owner may terminate these Contract Documents at any time for any reason upon submitting to the Contractor 30 days prior a written notice of its intention to terminate. Upon receipt of such notice, the Contractor shall immediately cease to incur expenses pursuant to these Contract Documents unless otherwise directed in the Owner's termination notice. The Contractor shall promptly notify the Owner of costs incurred to date of termination, and the Owner shall pay all such reasonable and supportable costs which payment shall not exceed the unpaid balance due on these Contract Documents.

c. Return of Property. Upon termination, the Contractor shall immediately return to the Owner, without limitation, all documents and items of any nature whatever, supplied to the Contractor by the Owner or developed by the Contractor in accordance with these Contract Documents.

18. Notice. Any and all notices or other communications required or permitted under this Contract shall be in writing and delivered by hand or mailed postage prepaid, return receipt requested, be registered or certified mail, or by other reputable delivery service, to the parties at the address set forth below or furnished from time to time in writing by one party to the other party. Any such notice or correspondence shall be deemed given when so delivered by hand, if so mailed when deposited with the United States Postal Service or if sent by private overnight or other delivery service.

Notices pursuant to these Contract Documents shall be given by certified mail addressed as follows:

a. Owner:

Board of Selectmen
C/O Operations Manager
Butterick Municipal Building
1 Park Street
Sterling, MA 01564
Phone: 978-422-8111

b. Contractor:

_____
_____
_____
_____
Phone: _____

19. Severability. If any term or application of this Contract shall to any extent be held invalid, illegal, or unenforceable by a court of competent jurisdiction, legality and the

enforceability of the remaining terms and conditions of the Contract shall not be deemed affected unless one or both parties would be substantially or materially prejudiced.

IN WITNESS WHEREOF, the Owner and the Contractor, by authorized officers of the parties, have executed this Agreement this _____, day of _____, 2020.

[AWARDING AUTHORITY]	[CONTRACTOR]
By: _____ Operations Manager as authorized by the Board of Selectmen on _____, 2020 Date: _____, 2020	By: _____ Date: _____, 2020

Approved as to Availability of Funds:

_____
Fred Aponte, Town Accountant

Date: _____, 2020

BID FORM

For

Three Vehicle Garage
at the Sterling Senior Center
36 Muddy Pond Rd. Sterling, MA

This Bid is submitted in accordance with your Invitation for Bids for the following Contract:

Vehicle Garage Project

The undersigned, having examined carefully the Contract Documents including the Agreement, the Invitation For Bids, Instruction to Bidders and General Specifications, Summary of Work, the Bid Form, Prevailing Wage Rates, and all related bulletins and/or addenda promulgated, together with any and all other documents, and having examined carefully and having become familiar by investigation with the various conditions which may affect the performance of the Work, agrees to furnish all labor, materials, and equipment required to complete the Work, to your complete satisfaction and acceptance.

ACKNOWLEDGEMENT OF ADDENDA

The undersigned acknowledges receipt of addenda(s) numbered: _____

TOTAL CONTRACT PRICE: (with/out alternates)

_____DOLLARS____CENTS ($_____)
WORDS FIGURES

Alternate 1:
_____DOLLARS____CENTS ($_____)
WORDS FIGURES

Alternate 2:
_____DOLLARS____CENTS ($_____)
WORDS FIGURES

Proposed Start date: _____ and Completion date: _____

Warranty offered (over one-year minimum)**:**

Process Description:
The Bidder shall provide on a separate page (or attachment) a description of their site preparation and quality assurance process.

The undersigned agrees that, if selected as Contractor, it will, within 7 days, Saturdays, Sundays, and legal holidays excluded, after presentation by the Owner, execute a contract in accordance with the terms of this bid and furnish a labor and materials or payment and performance bond, each to a surety company qualified to do business under the laws of the Commonwealth and satisfactory to the awarding authority and in the sum of 100% percent of the Total Contract Price. The premiums for which are to be paid by the Contractor and are included in the Total Contract Price.

STATEMENT OF TAX COMPLIANCE

Pursuant to M.G.L. c. 62C, § 49A, the undersigned certifies under the penalties of perjury that I, to the best of my knowledge and belief, have filed all state tax returns and paid all State Taxes required under law and in doing so acknowledge that any taxes shall be considered as being covered by the foregoing description as of the date of signing this document.

STATEMENT OF NON-COLLUSION

The undersigned certifies under penalties of perjury that this bid is in all respects bona fide, fair, and made without collusion or fraud with any other person, joint venture, partnership, corporation, or other business or legal entity.

STATEMENT OF ELIGAGBILITY

The undersigned further certifies, under penalty of perjury, that the said undersigned is not presently debarred from doing public construction work in the Commonwealth under the provisions of M.G.L. c. 29, § 29F, or any other applicable debarment provisions of any other chapter of the General Laws or any rule or regulation promulgated thereunder.

Bid of: _____
Company Name

___ a corporation, organized and existing under the general laws of _____.

___ a joint venture.

___ a partnership.

___ an individual doing business as _____

_____
Street Address City or Town State Zip

_____
Phone Number(s) Fax Number(s)

_____
Signature Title Date

_____
Print or Type Name Print or Type Title

REFERENCES

For
Three Vehicle Garage
at the Sterling Senior Center
36 Muddy Pond Rd. Sterling, MA

The undersigned offers the following information as evidence of qualifications to perform the Work as Bid upon according to all the requirements of the Contract Documents.

1. Have been in business under present name for ___years.

2. The Bidder is required to state below the names of at least 5 public agencies within 75 miles of the Town of Sterling where similar Work has been completed (add supplementary page if necessary).

	NAME	***ADDRESS***	***CONTACT***	***PHONE#***
1.				
2.				
3.				
4.				
5.				

Signature	Title	Date
Name	Company	Phone

STERLING SENIOR CENTER

GARAGE - 36 MUDDY POND ROAD

STERLING, MA 01564

☐ ARCHITECT

J FERRERA ASSOCIATES INC.

2 FERN LANE
STERLING, MA
01564

PHONE: 978-407-8848
EMAIL: JAFERRERA@COMCAST.NET

LIST OF DRAWINGS - GENERAL REVISIONS 09/23/2020

COVER SHEET

ARCHITECTURAL

A-201 FOUNDATION PLAN & DETAILS
A-202 FLOOR PLAN & BUILDING SECTION
A-203 ROOF PLAN & DETAILS
A-301 EXTERIOR ELEVATIONS
A-401 DOOR / WINDOW SCHEDULE & DETAILS

LOCUS PLAN

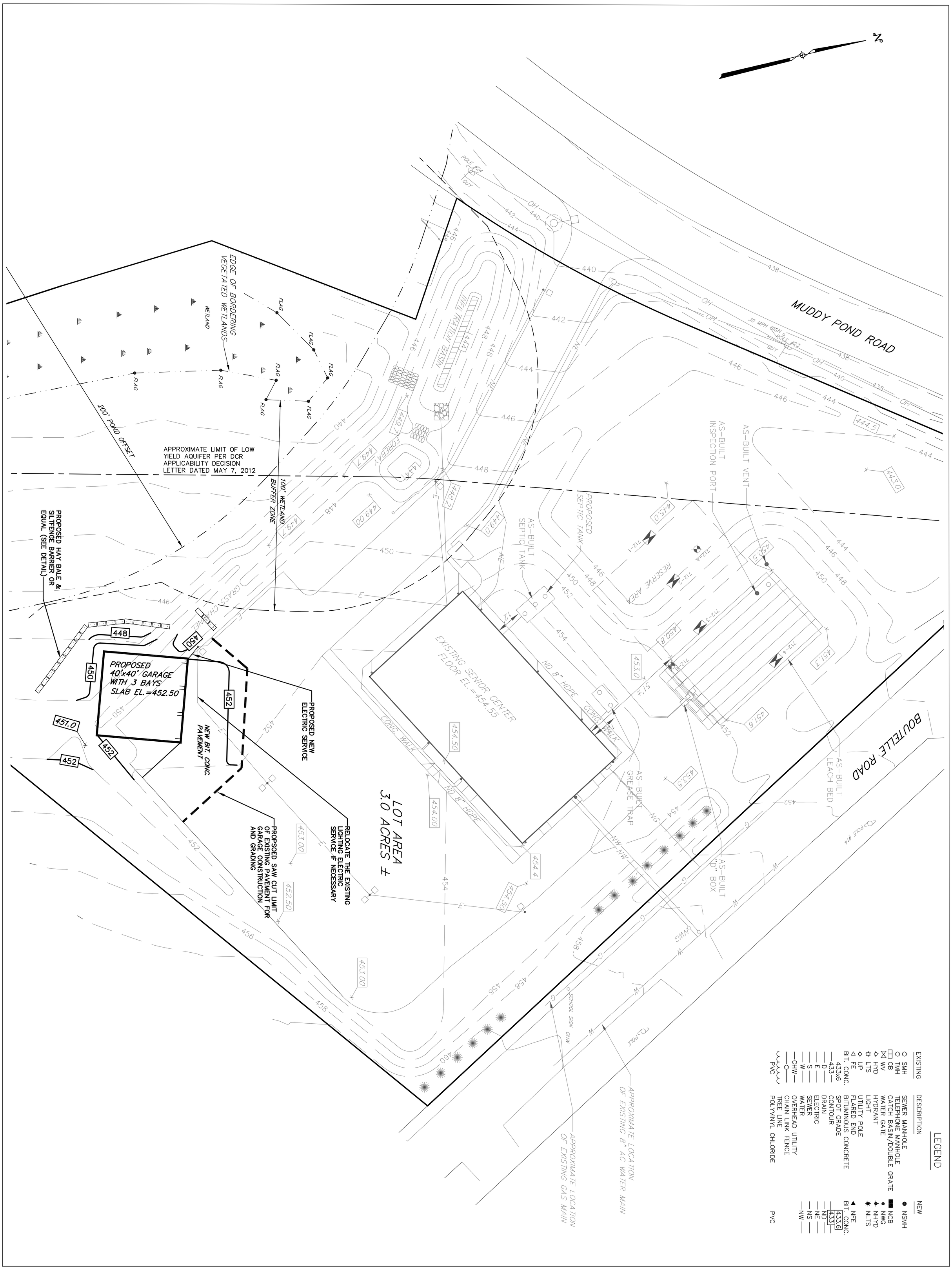

WHITMAN & BINGHAM ASSOCIATES
REGISTERED ENGINEERS & LAND SURVEYORS
510 MECHANIC STREET
LEOMINSTER, MASSACHUSETTS 01453
TEL. (978) 537-5296
FAX. (978) 537-1423

PROPOSED GARAGE BUILDING
FOR
SENIOR CENTER
IN
STERLING, MASSACHUSETTS

PREPARED FOR:
COUNCIL ON AGING
ONE PARK STREET
STERLING, MASSACHUSETTS 01432
(978) 422-3032

REVISIONS

NO.	DESCRIPTION	DATE	BY

DRAWN BY: MFP	CHECKED BY: BFM
DATE: FEBRUARY 17, 2020	SCALE: 1"=20'
SHEET NUMBER: 2 OF 3	JOB NUMBER: 12619
COMPS: 9462	PLAN NUMBER: X-X-XXX
PLAN REF(S): BINGHAM & ASSOC.	FIELD BOOK REF(S):

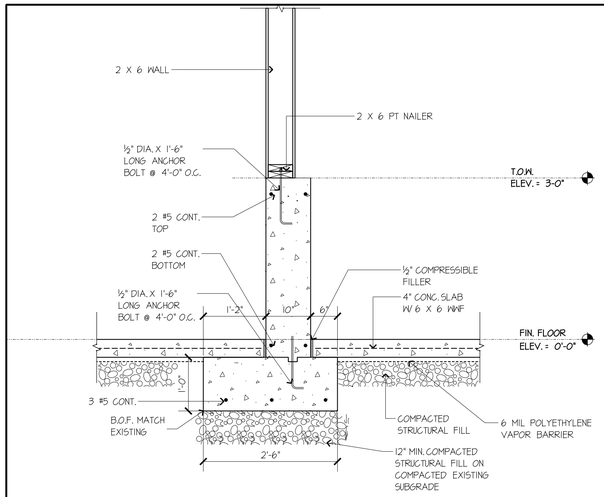

5 INTERIOR WALL SECTION

SCALE: 3/4" = 1'-0"

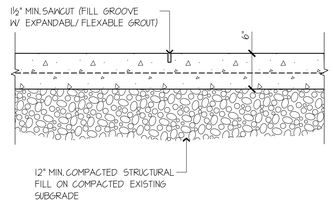

4 TYP. SAWCUT CONST. JOINT DETAIL

SCALE: N.T.S.

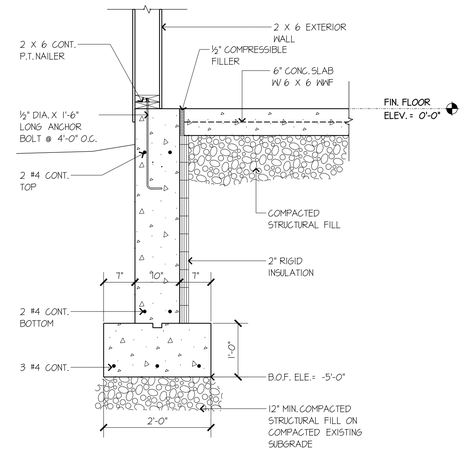

3 TYP. EXTERIOR WALL SECTION

SCALE: 3/4" = 1'-0"

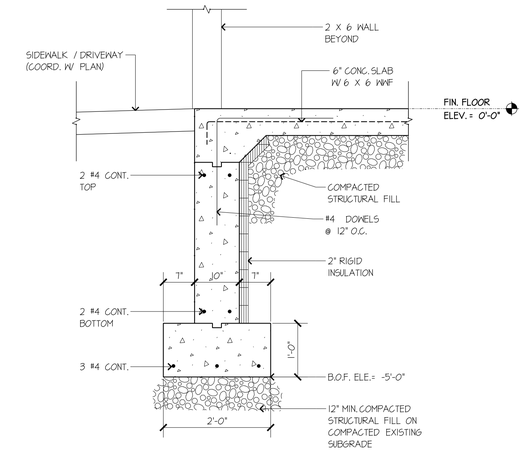

2 EXTERIOR OPENING WALL SECTION

SCALE: 3/4" = 1'-0"

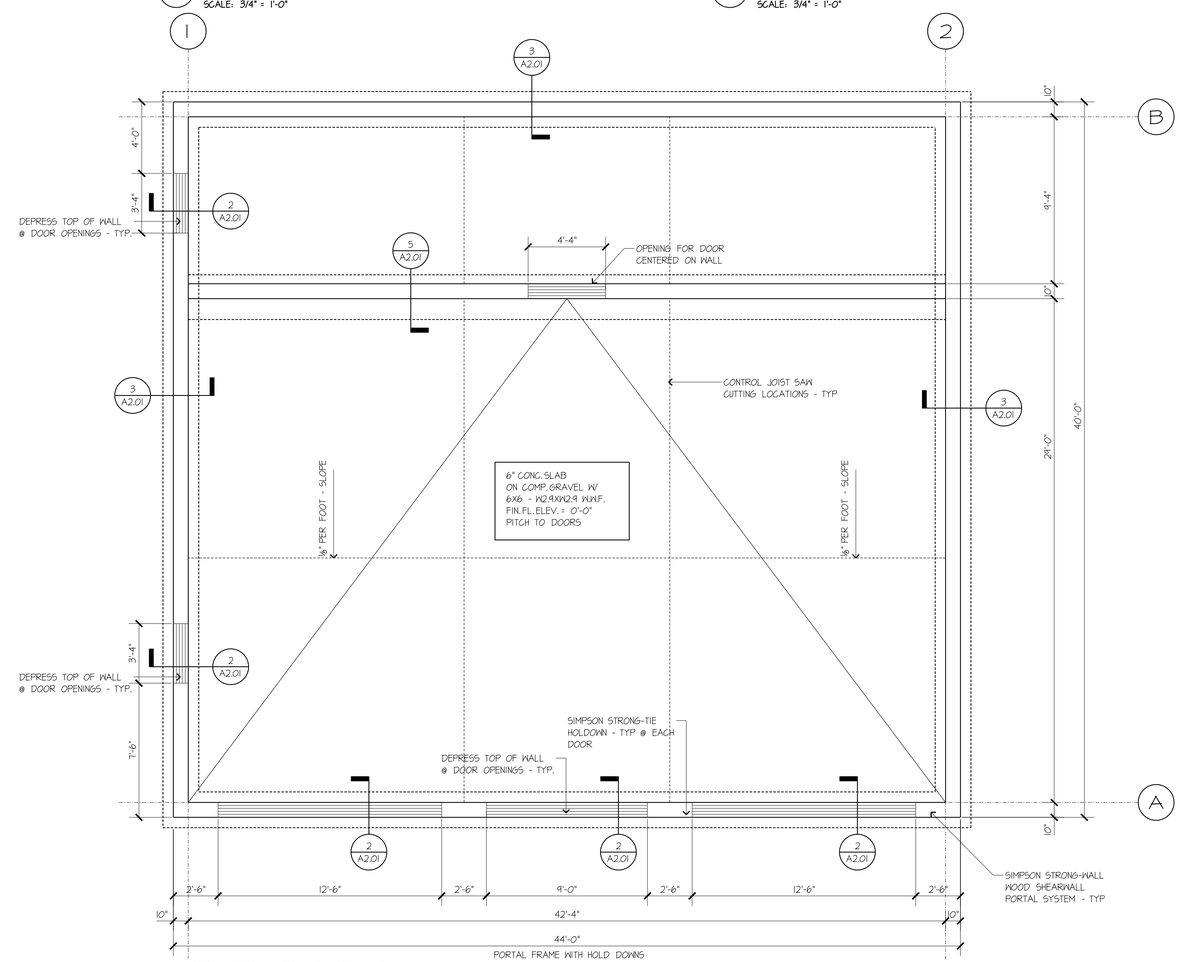

1 FOUNDATION PLAN

SCALE: 1/4" = 1'-0"

Senior Center Garage Building

36 Muddy Pond Road
Sterling, MA 01564

New Construction

J FERRERA ASSOCIATES INC.

Architecture • Design • Planning

2 Fern Lane - Sterling, MA 01564
tel:(978) 407-8848
email: jaferrera@comcast.net

ISSUED FOR PERMIT

NO.	DATE	DESCRIPTION
2	09-23-20	GENERAL REVISIONS
1	08-31-20	ISSUED FOR PERMIT

SHEET TITLE:

FOUNDATION PLAN & DETAILS

Job No.:	20006
FILE:	
DRAWN:	
SCALE :	AS NOTED
DATE:	07/28/2020

SHEET IDENTIFICATION:

A-201

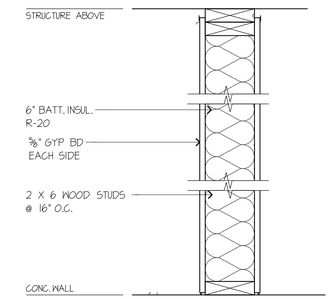

A PARTITION W/ 6" STUDS

GENERAL NOTES:

ALTERNATE PRICING - PROVIDED 6" BATT INSULATION (R-20) IN ALL GARAGE AREA EXTERIOR WALLS W/ 1 LAYER ⅝" GYP BD FROM FOUNDATION TO BOTTOM OF TRUSSES.

GENERAL CONVIENCE OUTLEST LOCATIONS PER CODE

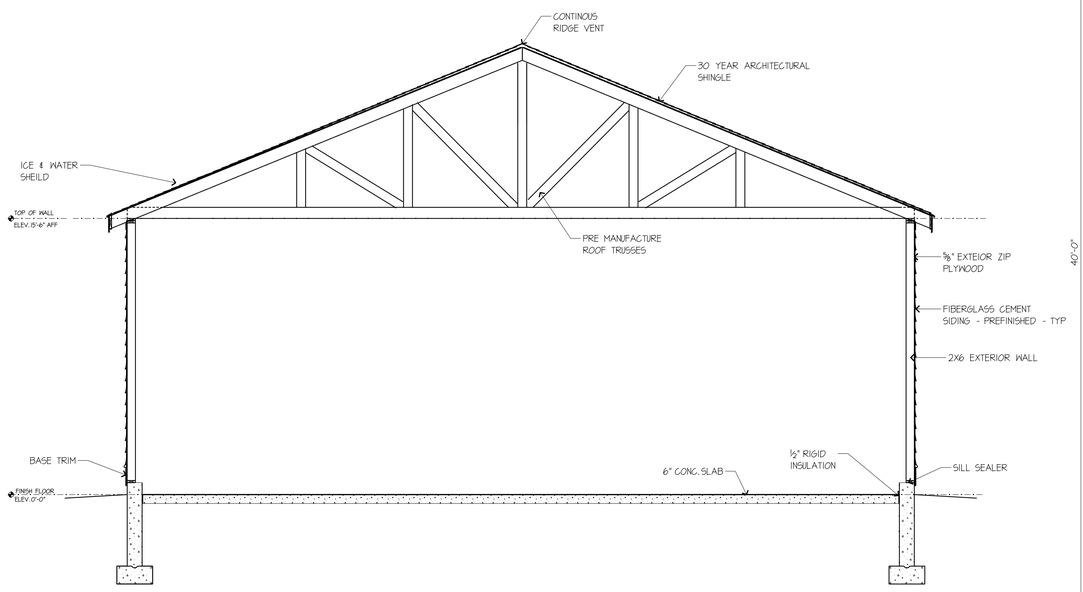

2 BUILDING SECTION

SCALE: 1/4" = 1'-0"

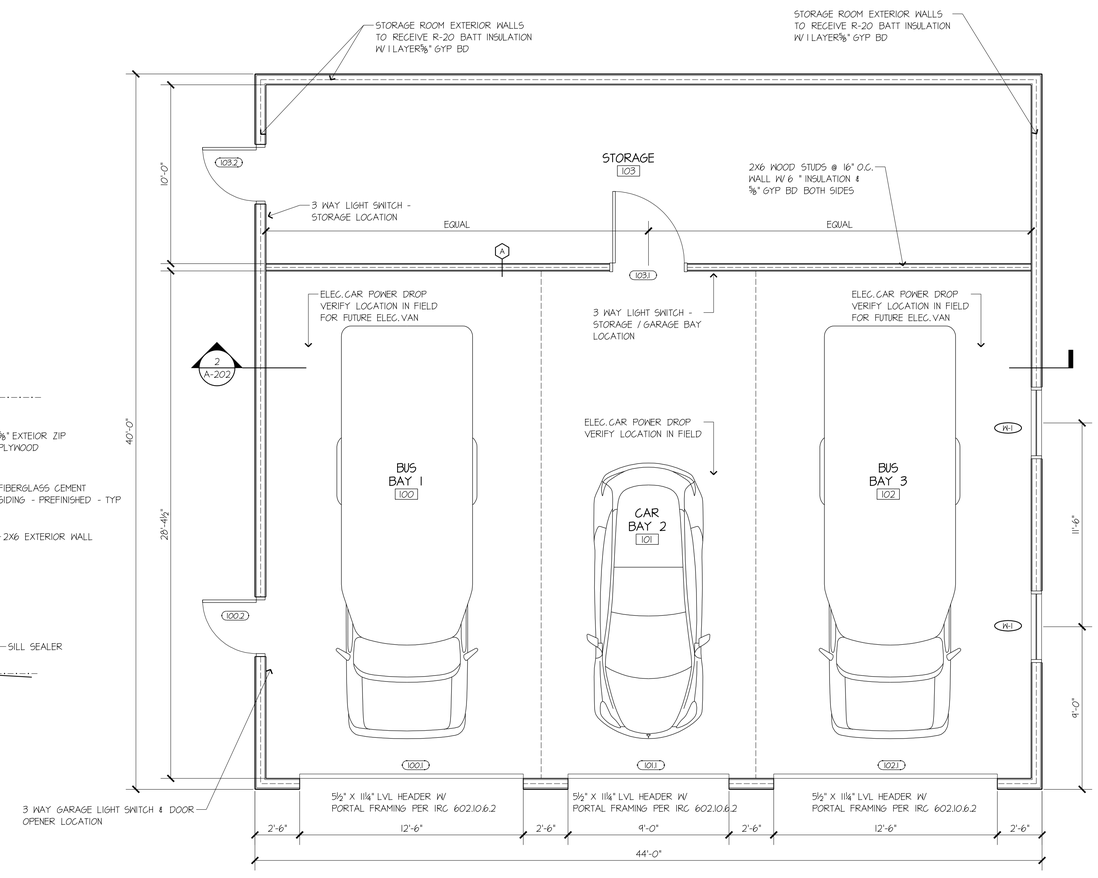

1 FLOOR PLAN

SCALE: 1/4" = 1'-0"

Senior Center Garage Building

36 Muddy Pond Road
Sterling, MA 01564

New Construction

J FERRERA ASSOCIATES INC.

Architecture • Design • Planning

2 Fern Lane - Sterling, MA 01564
tel:(978) 407-8848
email: jaferrera@comcast.net

ISSUED FOR PERMIT

NO.	DATE	DESCRIPTION
2	09-23-20	GENERAL REVISIONS
1	08-31-20	ISSUED FOR PERMIT

SHEET TITLE:

FLOOR PLAN & BUILDING SECTION

Job No.:	20006
FILE:	
DRAWN:	
SCALE :	1/4" = 1'-0"
DATE:	07/28/2020

SHEET IDENTIFICATION:

A-202

4 RIGHT SIDE ELEVATION

SCALE: 1/4" = 1'-0"

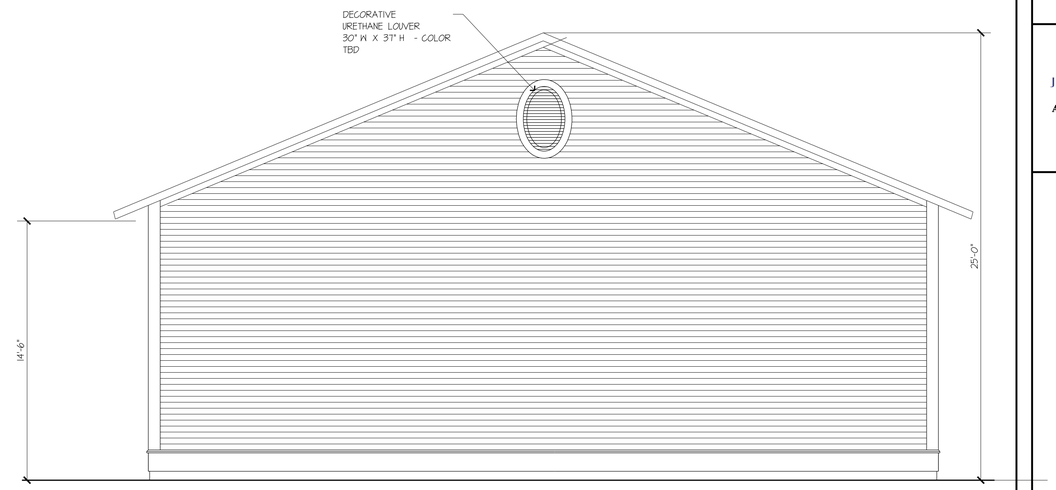

2 REAR ELEVATION

SCALE: 1/4" = 1'-0"

GENERAL NOTE:
ALL PVC TRIM TO BE SECURED
W/ TRIM SCREWS - TYP

3 LEFT SIDE ELEVATION

SCALE: 1/4" = 1'-0"

1 FRONT ELEVATION

SCALE: 1/4" = 1'-0"

Senior Center Garage Building

36 Muddy Pond Road
Sterling, MA 01564

New Construction

J FERRERA ASSOCIATES INC.

Architecture • Design • Planning

2 Fern Lane - Sterling, MA 01564
tel:(978) 407-8848
email: jaferrera@comcast.net

ISSUED FOR PERMIT

NO.	DATE	DESCRIPTION
1	08-31-20	ISSUED FOR PERMIT

SHEET TITLE:

EXTERIOR ELEVATION

Job No.:	**20006**
FILE:	
DRAWN:	
SCALE :	**1/4" = 1'-0"**
DATE:	**07/21/2020**

SHEET IDENTIFICATION:

A-301

DOOR SCHEDULE			DOOR						FRAME		
LOCATION	NO.	RTG.	TYPE	SIZE	TH	MAT	FIN	HDW	MAT	FIN	NOTES:
BAY 1	100.1		A	3'-0" X 7'-0"	1¾"	AMP			ALUM.	PT	LOCKING EXTERIOR DOOR
BAY 1	100.2			12'-6" X 12'-0"							GARGAE OVERHEAD DOOR
BAY 2	101.1			9'-0" X 9'-0"							GARGAE OVERHEAD DOOR
BAY 3	102.1			12'-6" X 12'-0"							GARGAE OVERHEAD DOOR
STORAGE	103.1		B	3'-6" X 7'-0"	1¾"	AMP			HM	PT	LOCKING INTERIOR DOOR
STORAGE	103.2		A	3'-0" X 7'-0"	1¾"	AMP			ALUM.	PT	LOCKING EXTERIOR DOOR

GENERAL NOTES:

AMP - ACRYLIC MODIF. POLYESTER
ALUM. - ALUMINUM
HM - HOLLOW METAL

OVERHEAD DOORS; PRE FINISHED WOOD LOOK
INSULATED STEEL DOORS, RAYNOR EDEN COAST
OR EQUAL TYPE DOORS

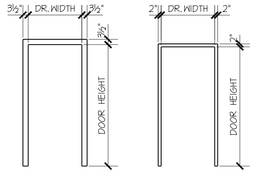

1. WD 2. METAL

DOOR FRAME TYPES

SCALE: ¼" = 1'-0"

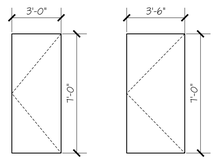

A. B.

DOOR TYPES

SCALE: ¼"=1'-0"

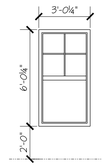

WINDOWS TO BE ALUM. CLAD WD.
WINDOWS W/ SCREENS BY ANDERSON
OR EQUAL. U-FACTOR OF 0.45 OR BETTER

W-1
DOUBLE HUNG

WINDOW TYPES

SCALE: ¼"=1'-0"

GENERAL NOTES:

1. CONTRACTOR TO VERIFY ALL CONDITIONS PRIOR TO WORK BEING PERFORMED, INCLUDING VERIFICATION OF PLANS AND SPECIFICATIONS TO SITE CONDITIONS, AND NOTIFY THE ARCHITECT/ENGINEER OF ANY DISCREPANCIES.
2. IN THE EVENT ADDITIONAL DETAILS OF INFORMATION IS NEEDED BY THE CONTRACTOR, THEY SHALL CONTACT THE ARCHITECT BEFORE PROCEEDING.
3. ALL DIMENSIONS IN PLAN ARE TO THE FACE OF STUD OR CONCRETE U.N.O., ALL DIMENSIONS IN SECTION OR ELEVATION ARE FROM TOP OF CONCRETE, PLYWOOD,PLATES,OR STEEL U.N.O.
4. SMOKE,HEAT,CO2 & FIRE DETECTION AS PER FIRE DEPARTMENT,STATE,AND LOCAL CODE REQUIREMENTS
5. ELECTRICAL: TO BE PROVIDED AND INSTALLED BY A LICENSED ELECTRICAL CONTRACTOR, SERVICE TO INCLUDE ALL NECESSARY MATERIALS AND ACCESSORIES TO PROVIDE A COMPLETE AND APPROVED SYSTEM WHICH CONFORMS TO STATE AND LOCAL CODES.
6. PLUMBING: TO BE PROVIDED AND INSTALLED BY A LICENSED PLUMBING CONTRACTOR, SERVICE TO INCLUDE ALL NECESSARY MATERIALS AND ACCESSORIES TO PROVIDE A COMPLETE AND APPROVED SYSTEM WHICH CONFORMS TO STATE AND LOCAL CODES.
7. MECHANICAL: TO BE PROVIDED AND INSTALLED BY A LICENSED MECHANICAL CONTRACTOR, SERVICE TO INCLUDE ALL NECESSARY MATERIALS AND ACCESSORIES TO PROVIDE A COMPLETE AND APPROVED SYSTEM WHICH CONFORMS TO STATE AND LOCAL CODES.
8. CONTRACTOR TO PROVIDE ALL TIES FOR GAS,ELECTRICAL,AND SEWER FROM THE ROAD TO THE BUILDING.
9. CONTRACTOR TO PROVIDE ALL PAVING,LANDSCAPING,DRAINAGE,ETC. PER SITE PLAN PROVIDED BY ENGINEER.
10. CONTRACTOR/SUBCONTRACTOR RESPONIBLE FOR ALL PERMITS AND FEES.
11. CONTRACTOR/SUBCONTRACTOR TO BE FULLY INSURED,INCLUDING WORKMAN'S COMPENSATION AND HOLD THE OWNER OR ARCHITECT HARMLESS FROM ANY CLAIMS RESULTING FROM WORK PERFORMED BY HIM/HER ON THIS JOB.
12. ALL CHANGES TO BE PERFORMED BY WRITTEN AND APPROVED CHANGE-ORDER SHOWING ALL WORK TO BE PERFORMED AND REFLECT ANY COST DIFFERENCES IF ANY.
13. CONTRACTOR/SUBCONTRACTOR TO KEEP SITE CONDITIONS CLEAN AND SAFE FROM ALL DEBRIS.
14. PRE-ENGINEERED AND FABRICATED TRUSSES TO BE PROVIDED BY TRUSS MANUFACTURER INCLUDING ALL SHOP DRAWINGS FOR THE ROOF STRUCTURE FOR APPROVAL BY OWNER AND ARCHITECT.
15. HARDWARE: ALL EXTERIOR DOORS TO HAVE THE NECESSARY PANIC AND CLOSURE DEVISES PROVIDED BY STATE AND LOCAL CODES. ALL INTERIOR DOORS TO BE DETERMINED BY THE OWNER.
16. THE ARCITECT RESERVES THE RIGHT TO MAKE RECOMMENDED CHANGES DO TO THE REQUIREMENTS OF THE LOCAL OFFICIALS OR OTHER UNFORESEEN CONDITIONS.

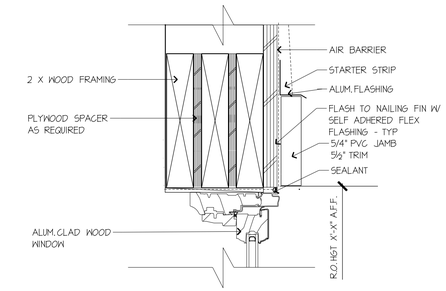

C WINDOW HEAD DETAIL

SCALE : 3"=1'-0"

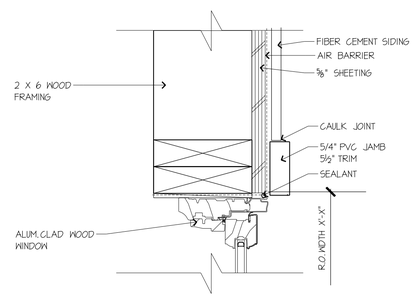

B WINDOW JAMB DETAIL

SCALE : 3"=1'-0"

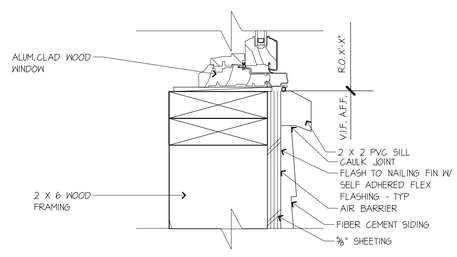

A WINDOW SILL DETAIL

SCALE : 3"=1'-0"

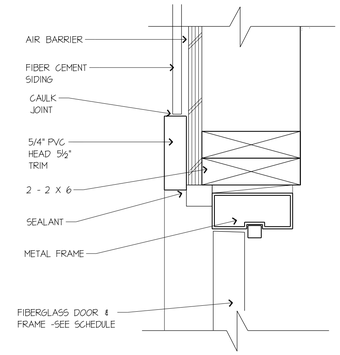

4 EXTERIOR DOOR JAMB DETAIL

SCALE : 3"=1'-0"

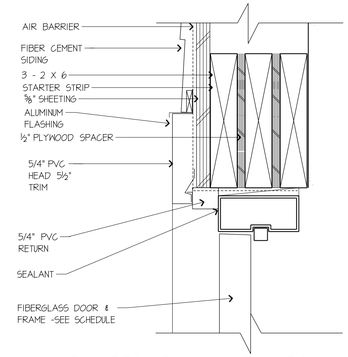

3 EXTERIOR DOOR HEAD DETAIL

SCALE : 3"=1'-0"

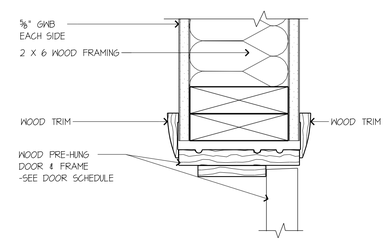

2 INTERIOR DOOR JAMB DETAIL

SCALE : 3"=1'-0"

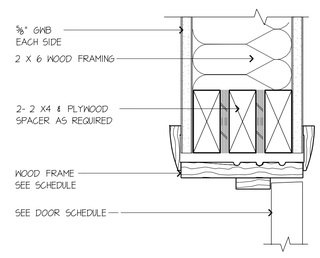

1 INTERIOR DOOR HEAD DETAIL

SCALE : 3"=1'-0"

Senior Center Garage Building

36 Muddy Pond Road
Sterling, MA 01564

New Construction

J FERRERA ASSOCIATES INC.
Architecture • Design • Planning
2 Fern Lane - Sterling, MA 01564
tel:(978) 407-8848
email: jaferrera@comcast.net

ISSUED FOR PERMIT

NO.	DATE	DESCRIPTION
2	09-23-20	GENERAL REVISIONS
1	08-31-20	ISSUED FOR PERMIT

SHEET TITLE:

DOOR / WINDOW SCHEDULE & DETAILS

Job No.:	20006
FILE:	
DRAWN:	
SCALE :	AS NOTED
DATE:	07/28/2020

SHEET IDENTIFICATION:

A-901

THE COMMONWEALTH OF MASSACHUSETTS
EXECUTIVE OFFICE OF LABOR AND WORKFORCE DEVELOPMENT
DEPARTMENT OF LABOR STANDARDS

Prevailing Wage Rates

As determined by the Director under the provisions of the Massachusetts General Laws, Chapter 149, Sections 26 to 27H

CHARLES D. BAKER
Governor

KARYN E. POLITO
Lt. Governor

ROSALIN ACOSTA
Secretary
MICHAEL FLANAGAN
Director

Awarding Authority: Town of Sterling

Contract Number:

City/Town: STERLING

Description of Work: The Town of Sterling proposes to build a 40ft X 44ft garage at the edge of the Senior Center parking lot. The building will house two small buses and an all-electric automobile.

Job Location: 36 Muddy Pond Rd, Sterling, MA

Information about Prevailing Wage Schedules for Awarding Authorities and Contractors

- This wage schedule applies only to the specific project referenced at the top of this page and uniquely identified by the "Wage Request Number" on all pages of this schedule.
- An Awarding Authority must request an updated wage schedule from the Department of Labor Standards ("DLS") if it has not opened bids or selected a contractor within 90 days of the date of issuance of the wage schedule. For CM AT RISK projects (bid pursuant to G.L. c.149A), the earlier of: (a) the execution date of the GMP Amendment, or (b) the bid for the first construction scope of work must be within 90-days of the wage schedule issuance date.
- The wage schedule shall be incorporated in any advertisement or call for bids for the project as required by M.G.L. c. 149, § 27. The wage schedule shall be made a part of the contract awarded for the project. The wage schedule must be posted in a conspicuous place at the work site for the life of the project in accordance with M.G.L. c. 149 § 27. The wages listed on the wage schedule must be paid to employees performing construction work on the project whether they are employed by the prime contractor, a filed sub-bidder, or any sub-contractor.
- All apprentices working on the project are required to be registered with the Massachusetts Department of Labor Standards, Division of Apprentice Standards (DLS/DAS). Apprentice must keep his/her apprentice identification card on his/her person during all work hours on the project. An apprentice registered with DAS may be paid the lower apprentice wage rate at the applicable step as provided on the prevailing wage schedule. **Any apprentice not registered with DLS/DAS regardless of whether or not they are registered with any other federal, state, local, or private agency must be paid the journeyworker's rate for the trade.**
- The wage rates will remain in effect for the duration of the project, except in the case of multi-year public construction projects. For construction projects lasting longer than one year, awarding authorities must request an updated wage schedule. Awarding authorities are required to request these updates no later than two weeks before the anniversary of the date the contract was executed by the awarding authority and the general contractor. For multi-year CM AT RISK projects, awarding authority must request an annual update no later than two weeks before the anniversary date, determined as the earlier of: (a) the execution date of the GMP Amendment, or (b) the execution date of the first amendment to permit procurement of construction services. Contractors are required to obtain the wage schedules from awarding authorities, and to pay no less than these rates to covered workers. The annual update requirement is not applicable to 27F "rental of equipment" contracts.
- Every contractor or subcontractor which performs construction work on the project is required to submit weekly payroll reports and a Statement of Compliance directly to the awarding authority by mail or email and keep them on file for three years. Each weekly payroll report must contain: the employee's name, address, occupational classification, hours worked, and wages paid. Do not submit weekly payroll reports to DLS. A sample of a payroll reporting form may be obtained at http://www.mass.gov/dols/pw.
- Contractors with questions about the wage rates or classifications included on the wage schedule have an affirmative obligation to inquire with DLS at (617) 626-6953.
- Employees not receiving the prevailing wage rate set forth on the wage schedule may report the violation to the Fair Labor Division of the office of the Attorney General at (617) 727-3465.
- Failure of a contractor or subcontractor to pay the prevailing wage rates listed on the wage schedule to all employees who perform construction work on the project is a violation of the law and subjects the contractor or subcontractor to civil and criminal penalties.

Classification	Effective Date	Base Wage	Health	Pension	Supplemental Unemployment	Total Rate
Construction						
(2 AXLE) DRIVER - EQUIPMENT *TEAMSTERS JOINT COUNCIL NO. 10 ZONE B*	08/01/2020	$35.15	$12.91	$13.72	$0.00	$61.78
	12/01/2020	$35.15	$12.91	$14.82	$0.00	$62.88
	06/01/2021	$35.95	$12.91	$14.82	$0.00	$63.68
	08/01/2021	$35.95	$13.41	$14.82	$0.00	$64.18
	12/01/2021	$35.95	$13.41	$16.01	$0.00	$65.37
(3 AXLE) DRIVER - EQUIPMENT *TEAMSTERS JOINT COUNCIL NO. 10 ZONE B*	08/01/2020	$35.22	$12.91	$13.72	$0.00	$61.85
	12/01/2020	$35.22	$12.91	$14.82	$0.00	$62.95
	06/01/2021	$36.02	$12.91	$14.82	$0.00	$63.75
	08/01/2021	$36.02	$13.41	$14.82	$0.00	$64.25
	12/01/2021	$36.02	$13.41	$16.01	$0.00	$65.44
(4 & 5 AXLE) DRIVER - EQUIPMENT *TEAMSTERS JOINT COUNCIL NO. 10 ZONE B*	08/01/2020	$35.34	$12.91	$13.72	$0.00	$61.97
	12/01/2020	$35.34	$12.91	$14.82	$0.00	$63.07
	06/01/2021	$36.14	$12.91	$14.82	$0.00	$63.87
	08/01/2021	$36.14	$13.41	$14.82	$0.00	$64.37
	12/01/2021	$36.14	$13.41	$16.01	$0.00	$65.56
ADS/SUBMERSIBLE PILOT *PILE DRIVER LOCAL 56 (ZONE 2)*	08/01/2020	$103.05	$9.40	$23.12	$0.00	$135.57
For apprentice rates see "Apprentice- PILE DRIVER"						
AIR TRACK OPERATOR *LABORERS - ZONE 2*	06/01/2020	$34.81	$8.60	$15.77	$0.00	$59.18
	12/01/2020	$35.70	$8.60	$15.77	$0.00	$60.07
	06/01/2021	$36.62	$8.60	$15.77	$0.00	$60.99
	12/01/2021	$37.53	$8.60	$15.77	$0.00	$61.90
For apprentice rates see "Apprentice- LABORER"						
ASBESTOS WORKER (PIPES & TANKS) *HEAT & FROST INSULATORS LOCAL 6 (WORCESTER)*	06/01/2020	$37.10	$12.80	$9.45	$0.00	$59.35
	12/01/2020	$38.10	$12.80	$9.45	$0.00	$60.35
ASPHALT RAKER *LABORERS - ZONE 2*	06/01/2020	$34.31	$8.60	$15.77	$0.00	$58.68
	12/01/2020	$35.20	$8.60	$15.77	$0.00	$59.57
	06/01/2021	$36.12	$8.60	$15.77	$0.00	$60.49
	12/01/2021	$37.03	$8.60	$15.77	$0.00	$61.40
For apprentice rates see "Apprentice- LABORER"						
ASPHALT/CONCRETE/CRUSHER PLANT-ON SITE *OPERATING ENGINEERS LOCAL 4*	06/01/2020	$49.33	$13.00	$15.70	$0.00	$78.03
	12/01/2020	$50.48	$13.00	$15.70	$0.00	$79.18
	06/01/2021	$51.58	$13.00	$15.70	$0.00	$80.28
	12/01/2021	$52.73	$13.00	$15.70	$0.00	$81.43
For apprentice rates see "Apprentice- OPERATING ENGINEERS"						
BACKHOE/FRONT-END LOADER *OPERATING ENGINEERS LOCAL 4*	06/01/2020	$49.33	$13.00	$15.70	$0.00	$78.03
	12/01/2020	$50.48	$13.00	$15.70	$0.00	$79.18
	06/01/2021	$51.58	$13.00	$15.70	$0.00	$80.28
	12/01/2021	$52.73	$13.00	$15.70	$0.00	$81.43
For apprentice rates see "Apprentice- OPERATING ENGINEERS"						
BARCO-TYPE JUMPING TAMPER *LABORERS - ZONE 2*	06/01/2020	$34.31	$8.60	$15.77	$0.00	$58.68
	12/01/2020	$35.20	$8.60	$15.77	$0.00	$59.57
	06/01/2021	$36.12	$8.60	$15.77	$0.00	$60.49
	12/01/2021	$37.03	$8.60	$15.77	$0.00	$61.40
For apprentice rates see "Apprentice- LABORER"						

Classification	Effective Date	Base Wage	Health	Pension	Supplemental Unemployment	Total Rate
BLOCK PAVER, RAMMER / CURB SETTER *LABORERS - ZONE 2*	06/01/2020	$34.81	$8.60	$15.77	$0.00	$59.18
	12/01/2020	$35.70	$8.60	$15.77	$0.00	$60.07
	06/01/2021	$36.62	$8.60	$15.77	$0.00	$60.99
	12/01/2021	$37.53	$8.60	$15.77	$0.00	$61.90
For apprentice rates see "Apprentice- LABORER"						
BOILER MAKER *BOILERMAKERS LOCAL 29*	01/01/2020	$46.10	$7.07	$17.98	$0.00	$71.15

Apprentice - *BOILERMAKER - Local 29*

Effective Date - 01/01/2020

Step	percent	Apprentice Base Wage	Health	Pension	Supplemental Unemployment	Total Rate
1	65	$29.97	$7.07	$11.69	$0.00	$48.73
2	65	$29.97	$7.07	$11.69	$0.00	$48.73
3	70	$32.27	$7.07	$12.59	$0.00	$51.93
4	75	$34.58	$7.07	$13.49	$0.00	$55.14
5	80	$36.88	$7.07	$14.38	$0.00	$58.33
6	85	$39.19	$7.07	$15.29	$0.00	$61.55
7	90	$41.49	$7.07	$16.18	$0.00	$64.74
8	95	$43.80	$7.07	$17.09	$0.00	$67.96

Notes:

Apprentice to Journeyworker Ratio:1:4

BRICK/STONE/ARTIFICIAL MASONRY (INCL. MASONRY WATERPROOFING) *BRICKLAYERS LOCAL 3 (LOWELL)*	08/01/2020	$53.61	$10.75	$21.45	$0.00	$85.81
	02/01/2021	$54.21	$10.75	$21.45	$0.00	$86.41
	08/01/2021	$55.61	$10.75	$21.61	$0.00	$87.97
	02/01/2022	$56.19	$10.75	$21.61	$0.00	$88.55

Classification	Effective Date	Base Wage	Health	Pension	Supplemental Unemployment	Total Rate

Apprentice - *BRICK/PLASTER/CEMENT MASON - Local 3 Lowell*

Effective Date - 08/01/2020

Step	percent	Apprentice Base Wage	Health	Pension	Supplemental Unemployment	Total Rate
1	50	$26.81	$10.75	$21.45	$0.00	$59.01
2	60	$32.17	$10.75	$21.45	$0.00	$64.37
3	70	$37.53	$10.75	$21.45	$0.00	$69.73
4	80	$42.89	$10.75	$21.45	$0.00	$75.09
5	90	$48.25	$10.75	$21.45	$0.00	$80.45

Effective Date - 02/01/2021

Step	percent	Apprentice Base Wage	Health	Pension	Supplemental Unemployment	Total Rate
1	50	$27.11	$10.75	$21.45	$0.00	$59.31
2	60	$32.53	$10.75	$21.45	$0.00	$64.73
3	70	$37.95	$10.75	$21.45	$0.00	$70.15
4	80	$43.37	$10.75	$21.45	$0.00	$75.57
5	90	$48.79	$10.75	$21.45	$0.00	$80.99

Notes:

Apprentice to Journeyworker Ratio:1:5

BULLDOZER/GRADER/SCRAPER *OPERATING ENGINEERS LOCAL 4*	06/01/2020	$48.81	$13.00	$15.70	$0.00	$77.51
	12/01/2020	$49.95	$13.00	$15.70	$0.00	$78.65
	06/01/2021	$51.04	$13.00	$15.70	$0.00	$79.74
	12/01/2021	$52.18	$13.00	$15.70	$0.00	$80.88
For apprentice rates see "Apprentice- OPERATING ENGINEERS"						
CAISSON & UNDERPINNING BOTTOM MAN *LABORERS - FOUNDATION AND MARINE*	06/01/2020	$40.30	$8.60	$17.24	$0.00	$66.14
	12/01/2020	$41.28	$8.60	$17.24	$0.00	$67.12
	06/01/2021	$42.30	$8.60	$17.24	$0.00	$68.14
	12/01/2021	$43.31	$8.60	$17.24	$0.00	$69.15
For apprentice rates see "Apprentice- LABORER"						
CAISSON & UNDERPINNING LABORER *LABORERS - FOUNDATION AND MARINE*	06/01/2020	$39.15	$8.60	$17.24	$0.00	$64.99
	12/01/2020	$40.13	$8.60	$17.24	$0.00	$65.97
	06/01/2021	$41.15	$8.60	$17.24	$0.00	$66.99
	12/01/2021	$42.16	$8.60	$17.24	$0.00	$68.00
For apprentice rates see "Apprentice- LABORER"						
CAISSON & UNDERPINNING TOP MAN *LABORERS - FOUNDATION AND MARINE*	06/01/2020	$39.15	$8.60	$17.24	$0.00	$64.99
	12/01/2020	$40.13	$8.60	$17.24	$0.00	$65.97
	06/01/2021	$41.15	$8.60	$17.24	$0.00	$66.99
	12/01/2021	$42.16	$8.60	$17.24	$0.00	$68.00
For apprentice rates see "Apprentice- LABORER"						
CARBIDE CORE DRILL OPERATOR *LABORERS - ZONE 2*	06/01/2020	$34.31	$8.60	$15.77	$0.00	$58.68
	12/01/2020	$35.20	$8.60	$15.77	$0.00	$59.57
	06/01/2021	$36.12	$8.60	$15.77	$0.00	$60.49
	12/01/2021	$37.03	$8.60	$15.77	$0.00	$61.40
For apprentice rates see "Apprentice- LABORER"						

Classification	Effective Date	Base Wage	Health	Pension	Supplemental Unemployment	Total Rate
CARPENTER *CARPENTERS -ZONE 2 (Eastern Massachusetts)*	09/01/2020	$42.94	$9.40	$18.95	$0.00	$71.29
	03/01/2021	$43.54	$9.40	$18.95	$0.00	$71.89
	09/01/2021	$44.19	$9.40	$18.95	$0.00	$72.54
	03/01/2022	$44.79	$9.40	$18.95	$0.00	$73.14
	09/01/2022	$45.44	$9.40	$18.95	$0.00	$73.79
	03/01/2023	$46.04	$9.40	$18.95	$0.00	$74.39

Apprentice - *CARPENTER - Zone 2 Eastern MA*

Effective Date - 09/01/2020

Step	percent	Apprentice Base Wage	Health	Pension	Supplemental Unemployment	Total Rate
1	50	$21.47	$9.40	$1.73	$0.00	$32.60
2	60	$25.76	$9.40	$1.73	$0.00	$36.89
3	70	$30.06	$9.40	$13.76	$0.00	$53.22
4	75	$32.21	$9.40	$13.76	$0.00	$55.37
5	80	$34.35	$9.40	$15.49	$0.00	$59.24
6	80	$34.35	$9.40	$15.49	$0.00	$59.24
7	90	$38.65	$9.40	$17.22	$0.00	$65.27
8	90	$38.65	$9.40	$17.22	$0.00	$65.27

Effective Date - 03/01/2021

Step	percent	Apprentice Base Wage	Health	Pension	Supplemental Unemployment	Total Rate
1	50	$21.77	$9.40	$1.73	$0.00	$32.90
2	60	$26.12	$9.40	$1.73	$0.00	$37.25
3	70	$30.48	$9.40	$13.76	$0.00	$53.64
4	75	$32.66	$9.40	$13.76	$0.00	$55.82
5	80	$34.83	$9.40	$15.49	$0.00	$59.72
6	80	$34.83	$9.40	$15.49	$0.00	$59.72
7	90	$39.19	$9.40	$17.22	$0.00	$65.81
8	90	$39.19	$9.40	$17.22	$0.00	$65.81

Notes:

% Indentured After 10/1/17; 45/45/55/55/70/70/80/80
Step 1&2 $30.45/ 3&4 $36.42/ 5&6 $54.95/ 7&8 $60.97

Apprentice to Journeyworker Ratio:1:5

CARPENTER WOOD FRAME *CARPENTERS-ZONE 3 (Wood Frame)*	04/01/2020	$22.66	$7.21	$4.80	$0.00	$34.67
	04/01/2021	$23.16	$7.21	$4.80	$0.00	$35.17
	04/01/2022	$23.66	$7.21	$4.80	$0.00	$35.67
	04/01/2023	$24.16	$7.21	$4.80	$0.00	$36.17

All Aspects of New Wood Frame Work

Classification	Effective Date	Base Wage	Health	Pension	Supplemental Unemployment	Total Rate

Apprentice - *CARPENTER (Wood Frame) - Zone 3*

Effective Date - 04/01/2020

Step	percent	Apprentice Base Wage	Health	Pension	Supplemental Unemployment	Total Rate
1	60	$13.60	$7.21	$0.00	$0.00	$20.81
2	60	$13.60	$7.21	$0.00	$0.00	$20.81
3	65	$14.73	$7.21	$0.00	$0.00	$21.94
4	70	$15.86	$7.21	$0.00	$0.00	$23.07
5	75	$17.00	$7.21	$3.80	$0.00	$28.01
6	80	$18.13	$7.21	$3.80	$0.00	$29.14
7	85	$19.26	$7.21	$3.80	$0.00	$30.27
8	90	$20.39	$7.21	$3.80	$0.00	$31.40

Effective Date - 04/01/2021

Step	percent	Apprentice Base Wage	Health	Pension	Supplemental Unemployment	Total Rate
1	60	$13.90	$7.21	$0.00	$0.00	$21.11
2	60	$13.90	$7.21	$0.00	$0.00	$21.11
3	65	$15.05	$7.21	$0.00	$0.00	$22.26
4	70	$16.21	$7.21	$0.00	$0.00	$23.42
5	75	$17.37	$7.21	$3.80	$0.00	$28.38
6	80	$18.53	$7.21	$3.80	$0.00	$29.54
7	85	$19.69	$7.21	$3.80	$0.00	$30.70
8	90	$20.84	$7.21	$3.80	$0.00	$31.85

Notes:

% Indentured After 10/1/17; 45/45/55/55/70/70/80/80
Step 1&2 $17.41/ 3&4 $19.67/ 5&6 $26.87/ 7&8 $29.14

Apprentice to Journeyworker Ratio:1:5

CEMENT MASONRY/PLASTERING *BRICKLAYERS LOCAL 3 (LOWELL)*	01/01/2020	$45.23	$12.75	$22.41	$0.62	$81.01

Apprentice - *CEMENT MASONRY/PLASTERING - Lowell*

Effective Date - 01/01/2020

Step	percent	Apprentice Base Wage	Health	Pension	Supplemental Unemployment	Total Rate
1	50	$22.62	$12.75	$15.41	$0.00	$50.78
2	60	$27.14	$12.75	$17.41	$0.62	$57.92
3	65	$29.40	$12.75	$18.41	$0.62	$61.18
4	70	$31.66	$12.75	$19.41	$0.62	$64.44
5	75	$33.92	$12.75	$20.41	$0.62	$67.70
6	80	$36.18	$12.75	$21.41	$0.62	$70.96
7	90	$40.71	$12.75	$22.41	$0.62	$76.49

Notes:

Steps 3,4 are 500 hrs. All other steps are 1,000 hrs.

Apprentice to Journeyworker Ratio:1:3

Classification	Effective Date	Base Wage	Health	Pension	Supplemental Unemployment	Total Rate
CHAIN SAW OPERATOR *LABORERS - ZONE 2*	06/01/2020	$34.31	$8.60	$15.77	$0.00	$58.68
	12/01/2020	$35.20	$8.60	$15.77	$0.00	$59.57
	06/01/2021	$36.12	$8.60	$15.77	$0.00	$60.49
	12/01/2021	$37.03	$8.60	$15.77	$0.00	$61.40
For apprentice rates see "Apprentice- LABORER"						
CLAM SHELLS/SLURRY BUCKETS/HEADING MACHINES *OPERATING ENGINEERS LOCAL 4*	06/01/2020	$50.33	$13.00	$15.70	$0.00	$79.03
	12/01/2020	$51.48	$13.00	$15.70	$0.00	$80.18
	06/01/2021	$52.58	$13.00	$15.70	$0.00	$81.28
	12/01/2021	$53.73	$13.00	$15.70	$0.00	$82.43
For apprentice rates see "Apprentice- OPERATING ENGINEERS"						
COMPRESSOR OPERATOR *OPERATING ENGINEERS LOCAL 4*	06/01/2020	$32.72	$13.00	$15.70	$0.00	$61.42
	12/01/2020	$33.50	$13.00	$15.70	$0.00	$62.20
	06/01/2021	$34.25	$13.00	$15.70	$0.00	$62.95
	12/01/2021	$35.04	$13.00	$15.70	$0.00	$63.74
For apprentice rates see "Apprentice- OPERATING ENGINEERS"						
DELEADER (BRIDGE) *PAINTERS LOCAL 35 - ZONE 2*	07/01/2020	$51.51	$8.25	$22.40	$0.00	$82.16
	01/01/2021	$52.06	$8.25	$22.75	$0.00	$83.06

Apprentice - *PAINTER Local 35 - BRIDGES/TANKS*

Effective Date - 07/01/2020

Step	percent	Apprentice Base Wage	Health	Pension	Supplemental Unemployment	Total Rate
1	50	$25.76	$8.25	$0.00	$0.00	$34.01
2	55	$28.33	$8.25	$6.05	$0.00	$42.63
3	60	$30.91	$8.25	$6.60	$0.00	$45.76
4	65	$33.48	$8.25	$7.15	$0.00	$48.88
5	70	$36.06	$8.25	$19.10	$0.00	$63.41
6	75	$38.63	$8.25	$19.65	$0.00	$66.53
7	80	$41.21	$8.25	$20.20	$0.00	$69.66
8	90	$46.36	$8.25	$21.30	$0.00	$75.91

Effective Date - 01/01/2021

Step	percent	Apprentice Base Wage	Health	Pension	Supplemental Unemployment	Total Rate
1	50	$26.03	$8.25	$0.00	$0.00	$34.28
2	55	$28.63	$8.25	$6.16	$0.00	$43.04
3	60	$31.24	$8.25	$6.72	$0.00	$46.21
4	65	$33.84	$8.25	$7.28	$0.00	$49.37
5	70	$36.44	$8.25	$19.39	$0.00	$64.08
6	75	$39.05	$8.25	$19.95	$0.00	$67.25
7	80	$41.65	$8.25	$20.51	$0.00	$70.41
8	90	$46.85	$8.25	$21.63	$0.00	$76.73

Notes:

Steps are 750 hrs.

Apprentice to Journeyworker Ratio:1:1

Classification	Effective Date	Base Wage	Health	Pension	Supplemental Unemployment	Total Rate
DEMO: ADZEMAN *LABORERS - ZONE 2* For apprentice rates see "Apprentice- LABORER"	12/01/2019	$39.30	$8.10	$16.60	$0.00	$64.00
DEMO: BACKHOE/LOADER/HAMMER OPERATOR *LABORERS - ZONE 2* For apprentice rates see "Apprentice- LABORER"	12/01/2019	$40.30	$8.10	$16.60	$0.00	$65.00
DEMO: BURNERS *LABORERS - ZONE 2* For apprentice rates see "Apprentice- LABORER"	12/01/2019	$40.05	$8.10	$16.60	$0.00	$64.75
DEMO: CONCRETE CUTTER/SAWYER *LABORERS - ZONE 2* For apprentice rates see "Apprentice- LABORER"	12/01/2019	$40.30	$8.10	$16.60	$0.00	$65.00
DEMO: JACKHAMMER OPERATOR *LABORERS - ZONE 2* For apprentice rates see "Apprentice- LABORER"	12/01/2019	$40.05	$8.10	$16.60	$0.00	$64.75
DEMO: WRECKING LABORER *LABORERS - ZONE 2* For apprentice rates see "Apprentice- LABORER"	12/01/2019	$39.30	$8.10	$16.60	$0.00	$64.00
DIRECTIONAL DRILL MACHINE OPERATOR *OPERATING ENGINEERS LOCAL 4*	06/01/2020	$48.81	$13.00	$15.70	$0.00	$77.51
	12/01/2020	$49.95	$13.00	$15.70	$0.00	$78.65
	06/01/2021	$51.04	$13.00	$15.70	$0.00	$79.74
	12/01/2021	$52.18	$13.00	$15.70	$0.00	$80.88
For apprentice rates see "Apprentice- OPERATING ENGINEERS"						
DIVER *PILE DRIVER LOCAL 56 (ZONE 2)* For apprentice rates see "Apprentice- PILE DRIVER"	08/01/2020	$68.70	$9.40	$23.12	$0.00	$101.22
DIVER TENDER *PILE DRIVER LOCAL 56 (ZONE 2)* For apprentice rates see "Apprentice- PILE DRIVER"	08/01/2020	$49.07	$9.40	$23.12	$0.00	$81.59
DIVER TENDER (EFFLUENT) *PILE DRIVER LOCAL 56 (ZONE 2)* For apprentice rates see "Apprentice- PILE DRIVER"	08/01/2020	$73.60	$9.40	$23.12	$0.00	$106.12
DIVER/SLURRY (EFFLUENT) *PILE DRIVER LOCAL 56 (ZONE 2)* For apprentice rates see "Apprentice- PILE DRIVER"	08/01/2020	$103.05	$9.40	$23.12	$0.00	$135.57
DRAWBRIDGE OPERATOR (Construction) *DRAWBRIDGE - SEIU LOCAL 888*	07/01/2020	$26.77	$6.67	$3.93	$0.16	$37.53
ELECTRICIAN *ELECTRICIANS LOCAL 96*	09/06/2020	$44.42	$11.13	$17.34	$0.00	$72.89
	09/05/2021	$45.01	$11.57	$17.42	$0.00	$74.00
	09/04/2022	$45.59	$12.20	$17.50	$0.00	$75.29

Classification	Effective Date	Base Wage	Health	Pension	Supplemental Unemployment	Total Rate

Apprentice - *ELECTRICIAN - Local 96*

Effective Date - 09/06/2020

Step	percent	Apprentice Base Wage	Health	Pension	Supplemental Unemployment	Total Rate
1	40	$17.77	$11.13	$0.53	$0.00	$29.43
2	43	$19.10	$11.13	$0.57	$0.00	$30.80
3	48	$21.32	$11.13	$14.11	$0.00	$46.56
4	55	$24.43	$11.13	$14.54	$0.00	$50.10
5	65	$28.87	$11.13	$15.17	$0.00	$55.17
6	80	$35.54	$11.13	$16.10	$0.00	$62.77

Notes:

Steps 1-2 are 1000 hrs; Steps 3-6 are 1500 hrs.

Apprentice to Journeyworker Ratio:2:3***

ELEVATOR CONSTRUCTOR *ELEVATOR CONSTRUCTORS LOCAL 41*	01/01/2020	$54.85	$15.73	$18.41	$0.00	$88.99
	01/01/2021	$56.69	$15.88	$19.31	$0.00	$91.88
	01/01/2022	$58.62	$16.03	$20.21	$0.00	$94.86

Apprentice - *ELEVATOR CONSTRUCTOR - Local 41*

Effective Date - 01/01/2020

Step	percent	Apprentice Base Wage	Health	Pension	Supplemental Unemployment	Total Rate
1	50	$27.43	$15.73	$0.00	$0.00	$43.16
2	55	$30.17	$15.73	$18.41	$0.00	$64.31
3	65	$35.65	$15.73	$18.41	$0.00	$69.79
4	70	$38.40	$15.73	$18.41	$0.00	$72.54
5	80	$43.88	$15.73	$18.41	$0.00	$78.02

Effective Date - 01/01/2021

Step	percent	Apprentice Base Wage	Health	Pension	Supplemental Unemployment	Total Rate
1	50	$28.35	$15.88	$0.00	$0.00	$44.23
2	55	$31.18	$15.88	$19.31	$0.00	$66.37
3	65	$36.85	$15.88	$19.31	$0.00	$72.04
4	70	$39.68	$15.88	$19.31	$0.00	$74.87
5	80	$45.35	$15.88	$19.31	$0.00	$80.54

Notes:

Steps 1-2 are 6 mos.; Steps 3-5 are 1 year

Apprentice to Journeyworker Ratio:1:1

ELEVATOR CONSTRUCTOR HELPER *ELEVATOR CONSTRUCTORS LOCAL 41*	01/01/2020	$38.40	$15.73	$18.41	$0.00	$72.54
	01/01/2021	$39.68	$15.88	$19.31	$0.00	$74.87
	01/01/2022	$41.03	$16.03	$20.21	$0.00	$77.27

For apprentice rates see "Apprentice - ELEVATOR CONSTRUCTOR"

Classification	Effective Date	Base Wage	Health	Pension	Supplemental Unemployment	Total Rate
FENCE & GUARD RAIL ERECTOR *LABORERS - ZONE 2*	06/01/2020	$34.31	$8.60	$15.77	$0.00	$58.68
	12/01/2020	$35.20	$8.60	$15.77	$0.00	$59.57
	06/01/2021	$36.12	$8.60	$15.77	$0.00	$60.49
	12/01/2021	$37.03	$8.60	$15.77	$0.00	$61.40
For apprentice rates see "Apprentice- LABORER"						
FIELD ENG.INST.PERSON-BLDG,SITE,HVY/HWY *OPERATING ENGINEERS LOCAL 4*	05/01/2020	$44.73	$12.50	$15.70	$0.00	$72.93
	11/01/2020	$45.73	$12.50	$15.70	$0.00	$73.93
	05/01/2021	$46.88	$12.50	$15.70	$0.00	$75.08
	11/01/2021	$47.88	$12.50	$15.70	$0.00	$76.08
	05/01/2022	$49.03	$12.50	$15.70	$0.00	$77.23
For apprentice rates see "Apprentice- OPERATING ENGINEERS"						
FIELD ENG.PARTY CHIEF-BLDG,SITE,HVY/HWY *OPERATING ENGINEERS LOCAL 4*	05/01/2020	$46.23	$12.50	$15.70	$0.00	$74.43
	11/01/2020	$47.24	$12.50	$15.70	$0.00	$75.44
	05/01/2021	$48.40	$12.50	$15.70	$0.00	$76.60
	11/01/2021	$49.41	$12.50	$15.70	$0.00	$77.61
	05/01/2022	$50.57	$12.50	$15.70	$0.00	$78.77
For apprentice rates see "Apprentice- OPERATING ENGINEERS"						
FIELD ENG.ROD PERSON-BLDG,SITE,HVY/HWY *OPERATING ENGINEERS LOCAL 4*	05/01/2020	$22.64	$12.50	$15.70	$0.00	$50.84
	11/01/2020	$23.23	$12.50	$15.70	$0.00	$51.43
	05/01/2021	$23.91	$12.50	$15.70	$0.00	$52.11
	11/01/2021	$24.51	$12.50	$15.70	$0.00	$52.71
	05/01/2022	$25.18	$12.50	$15.70	$0.00	$53.38
For apprentice rates see "Apprentice- OPERATING ENGINEERS"						
FIRE ALARM INSTALLER *ELECTRICIANS LOCAL 96*	09/06/2020	$44.42	$11.13	$17.34	$0.00	$72.89
	09/05/2021	$45.01	$11.57	$17.42	$0.00	$74.00
	09/04/2022	$45.59	$12.20	$17.50	$0.00	$75.29
For apprentice rates see "Apprentice- ELECTRICIAN"						
FIRE ALARM REPAIR / MAINT/COMMISSIONING *ELECTRICIANS LOCAL 96*	09/06/2020	$44.42	$11.13	$17.34	$0.00	$72.89
	09/05/2021	$45.01	$11.57	$17.42	$0.00	$74.00
	09/04/2022	$45.59	$12.20	$17.50	$0.00	$75.29
For apprentice rates see "Apprentice- ELECTRICIAN"						
FIREMAN (ASST. ENGINEER) *OPERATING ENGINEERS LOCAL 4*	06/01/2020	$40.30	$13.00	$15.70	$0.00	$69.00
	12/01/2020	$41.25	$13.00	$15.70	$0.00	$69.95
	06/01/2021	$42.16	$13.00	$15.70	$0.00	$70.86
	12/01/2021	$43.11	$13.00	$15.70	$0.00	$71.81
For apprentice rates see "Apprentice- OPERATING ENGINEERS"						
FLAGGER & SIGNALER *LABORERS - ZONE 2*	06/01/2020	$23.50	$8.60	$15.77	$0.00	$47.87
	12/01/2020	$24.50	$8.60	$15.77	$0.00	$48.87
	06/01/2021	$24.50	$8.60	$15.77	$0.00	$48.87
	12/01/2021	$24.50	$8.60	$15.77	$0.00	$48.87
For apprentice rates see "Apprentice- LABORER"						
FLOORCOVERER *FLOORCOVERERS LOCAL 2168 ZONE II*	09/01/2020	$45.48	$9.40	$19.25	$0.00	$74.13
	03/01/2021	$46.28	$9.40	$19.25	$0.00	$74.93
	09/01/2021	$47.08	$9.40	$19.25	$0.00	$75.73
	03/01/2022	$47.88	$9.40	$19.25	$0.00	$76.53

Classification	Effective Date	Base Wage	Health	Pension	Supplemental Unemployment	Total Rate

Apprentice - *FLOORCOVERER - Local 2168 Zone II*

Effective Date - 09/01/2020

Step	percent	Apprentice Base Wage	Health	Pension	Supplemental Unemployment	Total Rate
1	50	$22.74	$9.40	$1.79	$0.00	$33.93
2	55	$25.01	$9.40	$1.79	$0.00	$36.20
3	60	$27.29	$9.40	$13.88	$0.00	$50.57
4	65	$29.56	$9.40	$13.88	$0.00	$52.84
5	70	$31.84	$9.40	$15.67	$0.00	$56.91
6	75	$34.11	$9.40	$15.67	$0.00	$59.18
7	80	$36.38	$9.40	$17.46	$0.00	$63.24
8	85	$38.66	$9.40	$17.46	$0.00	$65.52

Effective Date - 03/01/2021

Step	percent	Apprentice Base Wage	Health	Pension	Supplemental Unemployment	Total Rate
1	50	$23.14	$9.40	$1.79	$0.00	$34.33
2	55	$25.45	$9.40	$1.79	$0.00	$36.64
3	60	$27.77	$9.40	$13.88	$0.00	$51.05
4	65	$30.08	$9.40	$13.88	$0.00	$53.36
5	70	$32.40	$9.40	$15.67	$0.00	$57.47
6	75	$34.71	$9.40	$15.67	$0.00	$59.78
7	80	$37.02	$9.40	$17.46	$0.00	$63.88
8	85	$39.34	$9.40	$17.46	$0.00	$66.20

Notes: Steps are 750 hrs.
% After 09/1/17; 45/45/55/55/70/70/80/80 (1500hr Steps)
Step 1&2 $31.66/ 3&4 $37.93/ 5&6 $56.91/ 7&8 $63.24

Apprentice to Journeyworker Ratio:1:1

FORK LIFT/CHERRY PICKER *OPERATING ENGINEERS LOCAL 4*	06/01/2020	$49.33	$13.00	$15.70	$0.00	$78.03
	12/01/2020	$50.48	$13.00	$15.70	$0.00	$79.18
	06/01/2021	$51.58	$13.00	$15.70	$0.00	$80.28
	12/01/2021	$52.73	$13.00	$15.70	$0.00	$81.43
For apprentice rates see "Apprentice- OPERATING ENGINEERS"						
GENERATOR/LIGHTING PLANT/HEATERS *OPERATING ENGINEERS LOCAL 4*	06/01/2020	$32.72	$13.00	$15.70	$0.00	$61.42
	12/01/2020	$33.50	$13.00	$15.70	$0.00	$62.20
	06/01/2021	$34.25	$13.00	$15.70	$0.00	$62.95
	12/01/2021	$35.04	$13.00	$15.70	$0.00	$63.74
For apprentice rates see "Apprentice- OPERATING ENGINEERS"						
GLAZIER (GLASS PLANK/AIR BARRIER/INTERIOR SYSTEMS) *GLAZIERS LOCAL 35 (ZONE 2)*	07/01/2020	$41.01	$8.25	$22.40	$0.00	$71.66
	01/01/2021	$41.56	$8.25	$22.75	$0.00	$72.56

Classification	Effective Date	Base Wage	Health	Pension	Supplemental Unemployment	Total Rate

Apprentice - *GLAZIER - Local 35 Zone 2*

Effective Date - 07/01/2020

Step	percent	Apprentice Base Wage	Health	Pension	Supplemental Unemployment	Total Rate
1	50	$20.51	$8.25	$0.00	$0.00	$28.76
2	55	$22.56	$8.25	$6.05	$0.00	$36.86
3	60	$24.61	$8.25	$6.60	$0.00	$39.46
4	65	$26.66	$8.25	$7.15	$0.00	$42.06
5	70	$28.71	$8.25	$19.10	$0.00	$56.06
6	75	$30.76	$8.25	$19.65	$0.00	$58.66
7	80	$32.81	$8.25	$20.20	$0.00	$61.26
8	90	$36.91	$8.25	$21.30	$0.00	$66.46

Effective Date - 01/01/2021

Step	percent	Apprentice Base Wage	Health	Pension	Supplemental Unemployment	Total Rate
1	50	$20.78	$8.25	$0.00	$0.00	$29.03
2	55	$22.86	$8.25	$6.16	$0.00	$37.27
3	60	$24.94	$8.25	$6.72	$0.00	$39.91
4	65	$27.01	$8.25	$7.28	$0.00	$42.54
5	70	$29.09	$8.25	$19.39	$0.00	$56.73
6	75	$31.17	$8.25	$19.95	$0.00	$59.37
7	80	$33.25	$8.25	$20.51	$0.00	$62.01
8	90	$37.40	$8.25	$21.63	$0.00	$67.28

Notes:

Steps are 750 hrs.

Apprentice to Journeyworker Ratio:1:1

HOISTING ENGINEER/CRANES/GRADALLS *OPERATING ENGINEERS LOCAL 4*	06/01/2020	$49.33	$13.00	$15.70	$0.00	$78.03
	12/01/2020	$50.48	$13.00	$15.70	$0.00	$79.18
	06/01/2021	$51.58	$13.00	$15.70	$0.00	$80.28
	12/01/2021	$52.73	$13.00	$15.70	$0.00	$81.43

Classification	Effective Date	Base Wage	Health	Pension	Supplemental Unemployment	Total Rate

Apprentice - *OPERATING ENGINEERS - Local 4*

Effective Date - 06/01/2020

Step	percent	Apprentice Base Wage	Health	Pension	Supplemental Unemployment	Total Rate
1	55	$27.13	$13.00	$0.00	$0.00	$40.13
2	60	$29.60	$13.00	$15.70	$0.00	$58.30
3	65	$32.06	$13.00	$15.70	$0.00	$60.76
4	70	$34.53	$13.00	$15.70	$0.00	$63.23
5	75	$37.00	$13.00	$15.70	$0.00	$65.70
6	80	$39.46	$13.00	$15.70	$0.00	$68.16
7	85	$41.93	$13.00	$15.70	$0.00	$70.63
8	90	$44.40	$13.00	$15.70	$0.00	$73.10

Effective Date - 12/01/2020

Step	percent	Apprentice Base Wage	Health	Pension	Supplemental Unemployment	Total Rate
1	55	$27.76	$13.00	$0.00	$0.00	$40.76
2	60	$30.29	$13.00	$15.70	$0.00	$58.99
3	65	$32.81	$13.00	$15.70	$0.00	$61.51
4	70	$35.34	$13.00	$15.70	$0.00	$64.04
5	75	$37.86	$13.00	$15.70	$0.00	$66.56
6	80	$40.38	$13.00	$15.70	$0.00	$69.08
7	85	$42.91	$13.00	$15.70	$0.00	$71.61
8	90	$45.43	$13.00	$15.70	$0.00	$74.13

Notes:

Apprentice to Journeyworker Ratio:1:6

HVAC (DUCTWORK) *SHEETMETAL WORKERS LOCAL 63*	01/01/2020	$36.99	$10.64	$16.22	$1.77	$65.62
For apprentice rates see "Apprentice- SHEET METAL WORKER"						
HVAC (ELECTRICAL CONTROLS) *ELECTRICIANS LOCAL 96*	09/06/2020	$44.42	$11.13	$17.34	$0.00	$72.89
	09/05/2021	$45.01	$11.57	$17.42	$0.00	$74.00
	09/04/2022	$45.59	$12.20	$17.50	$0.00	$75.29
For apprentice rates see "Apprentice- ELECTRICIAN"						
HVAC (TESTING AND BALANCING - AIR) *SHEETMETAL WORKERS LOCAL 63*	01/01/2020	$36.99	$10.64	$16.22	$1.77	$65.62
For apprentice rates see "Apprentice- SHEET METAL WORKER"						
HVAC (TESTING AND BALANCING -WATER) *PLUMBERS LOCAL 4*	09/01/2020	$46.91	$9.80	$15.71	$0.00	$72.42
	03/01/2021	$47.91	$9.80	$15.71	$0.00	$73.42
	09/01/2021	$48.91	$9.80	$15.71	$0.00	$74.42
	03/01/2022	$49.91	$9.80	$15.71	$0.00	$75.42
For apprentice rates see "Apprentice- PIPEFITTER" or "PLUMBER/PIPEFITTER"						
HVAC MECHANIC *PLUMBERS LOCAL 4*	09/01/2020	$46.91	$9.80	$15.71	$0.00	$72.42
	03/01/2021	$47.91	$9.80	$15.71	$0.00	$73.42
	09/01/2021	$48.91	$9.80	$15.71	$0.00	$74.42
	03/01/2022	$49.91	$9.80	$15.71	$0.00	$75.42

Classification	Effective Date	Base Wage	Health	Pension	Supplemental Unemployment	Total Rate
For apprentice rates see "Apprentice- PIPEFITTER" or "PLUMBER/PIPEFITTER"						
HYDRAULIC DRILLS *LABORERS - ZONE 2*	06/01/2020	$34.81	$8.60	$15.77	$0.00	$59.18
	12/01/2020	$35.70	$8.60	$15.77	$0.00	$60.07
	06/01/2021	$36.62	$8.60	$15.77	$0.00	$60.99
	12/01/2021	$37.53	$8.60	$15.77	$0.00	$61.90
For apprentice rates see "Apprentice- LABORER"						
INSULATOR (PIPES & TANKS) *HEAT & FROST INSULATORS LOCAL 6 (WORCESTER)*	09/01/2020	$44.10	$13.80	$17.14	$0.00	$75.04
	09/01/2021	$46.50	$13.80	$17.14	$0.00	$77.44
	09/01/2022	$48.95	$13.80	$17.14	$0.00	$79.89

Apprentice - *ASBESTOS INSULATOR (Pipes & Tanks) - Local 6 Worcester*

Effective Date - 09/01/2020

Step	percent	Apprentice Base Wage	Health	Pension	Supplemental Unemployment	Total Rate
1	50	$22.05	$13.80	$12.42	$0.00	$48.27
2	60	$26.46	$13.80	$13.36	$0.00	$53.62
3	70	$30.87	$13.80	$14.31	$0.00	$58.98
4	80	$35.28	$13.80	$15.25	$0.00	$64.33

Effective Date - 09/01/2021

Step	percent	Apprentice Base Wage	Health	Pension	Supplemental Unemployment	Total Rate
1	50	$23.25	$13.80	$12.42	$0.00	$49.47
2	60	$27.90	$13.80	$13.36	$0.00	$55.06
3	70	$32.55	$13.80	$14.31	$0.00	$60.66
4	80	$37.20	$13.80	$15.25	$0.00	$66.25

Notes:

Steps are 1 year

Apprentice to Journeyworker Ratio:1:4

IRONWORKER/WELDER *IRONWORKERS LOCAL 7 (WORCESTER AREA)*	03/16/2019	$46.36	$8.00	$23.50	$0.00	$77.86

Apprentice - *IRONWORKER - Local 7 Worcester*

Effective Date - 03/16/2019

Step	percent	Apprentice Base Wage	Health	Pension	Supplemental Unemployment	Total Rate
1	60	$27.82	$8.00	$23.50	$0.00	$59.32
2	70	$32.45	$8.00	$23.50	$0.00	$63.95
3	75	$34.77	$8.00	$23.50	$0.00	$66.27
4	80	$37.09	$8.00	$23.50	$0.00	$68.59
5	85	$39.41	$8.00	$23.50	$0.00	$70.91
6	90	$41.72	$8.00	$23.50	$0.00	$73.22

Notes:

Structural 1:6; Ornamental 1:4

Apprentice to Journeyworker Ratio:

Classification	Effective Date	Base Wage	Health	Pension	Supplemental Unemployment	Total Rate
JACKHAMMER & PAVING BREAKER OPERATOR *LABORERS - ZONE 2*	06/01/2020	$34.31	$8.60	$15.77	$0.00	$58.68
	12/01/2020	$35.20	$8.60	$15.77	$0.00	$59.57
	06/01/2021	$36.12	$8.60	$15.77	$0.00	$60.49
	12/01/2021	$37.03	$8.60	$15.77	$0.00	$61.40
For apprentice rates see "Apprentice- LABORER"						
LABORER *LABORERS - ZONE 2*	06/01/2020	$34.06	$8.60	$15.77	$0.00	$58.43
	12/01/2020	$34.95	$8.60	$15.77	$0.00	$59.32
	06/01/2021	$35.87	$8.60	$15.77	$0.00	$60.24
	12/01/2021	$36.78	$8.60	$15.77	$0.00	$61.15

Apprentice - *LABORER - Zone 2*

Effective Date - 06/01/2020

Step	percent	Apprentice Base Wage	Health	Pension	Supplemental Unemployment	Total Rate
1	60	$20.44	$8.60	$15.77	$0.00	$44.81
2	70	$23.84	$8.60	$15.77	$0.00	$48.21
3	80	$27.25	$8.60	$15.77	$0.00	$51.62
4	90	$30.65	$8.60	$15.77	$0.00	$55.02

Effective Date - 12/01/2020

Step	percent	Apprentice Base Wage	Health	Pension	Supplemental Unemployment	Total Rate
1	60	$20.97	$8.60	$15.77	$0.00	$45.34
2	70	$24.47	$8.60	$15.77	$0.00	$48.84
3	80	$27.96	$8.60	$15.77	$0.00	$52.33
4	90	$31.46	$8.60	$15.77	$0.00	$55.83

Notes:

Apprentice to Journeyworker Ratio:1:5

LABORER: CARPENTER TENDER *LABORERS - ZONE 2*	06/01/2020	$34.06	$8.60	$15.77	$0.00	$58.43
	12/01/2020	$34.95	$8.60	$15.77	$0.00	$59.32
	06/01/2021	$35.87	$8.60	$15.77	$0.00	$60.24
	12/01/2021	$36.78	$8.60	$15.77	$0.00	$61.15
For apprentice rates see "Apprentice- LABORER"						
LABORER: CEMENT FINISHER TENDER *LABORERS - ZONE 2*	06/01/2020	$34.06	$8.60	$15.77	$0.00	$58.43
	12/01/2020	$34.95	$8.60	$15.77	$0.00	$59.32
	06/01/2021	$35.87	$8.60	$15.77	$0.00	$60.24
	12/01/2021	$36.78	$8.60	$15.77	$0.00	$61.15
For apprentice rates see "Apprentice- LABORER"						
LABORER: HAZARDOUS WASTE/ASBESTOS REMOVER *LABORERS - ZONE 2*	06/01/2020	$34.15	$8.60	$15.83	$0.00	$58.58
For apprentice rates see "Apprentice- LABORER"						
LABORER: MASON TENDER *LABORERS - ZONE 2*	06/01/2020	$34.31	$8.60	$15.77	$0.00	$58.68
	12/01/2020	$35.20	$8.60	$15.77	$0.00	$59.57
	06/01/2021	$36.12	$8.60	$15.77	$0.00	$60.49
	12/01/2021	$37.03	$8.60	$15.77	$0.00	$61.40
For apprentice rates see "Apprentice- LABORER"						

Classification	Effective Date	Base Wage	Health	Pension	Supplemental Unemployment	Total Rate
LABORER: MULTI-TRADE TENDER *LABORERS - ZONE 2*	06/01/2020	$34.06	$8.60	$15.77	$0.00	$58.43
	12/01/2020	$34.95	$8.60	$15.77	$0.00	$59.32
	06/01/2021	$35.87	$8.60	$15.77	$0.00	$60.24
	12/01/2021	$36.78	$8.60	$15.77	$0.00	$61.15
For apprentice rates see "Apprentice- LABORER"						
LABORER: TREE REMOVER *LABORERS - ZONE 2*	06/01/2020	$34.06	$8.60	$15.77	$0.00	$58.43
	12/01/2020	$34.95	$8.60	$15.77	$0.00	$59.32
	06/01/2021	$35.87	$8.60	$15.77	$0.00	$60.24
	12/01/2021	$36.78	$8.60	$15.77	$0.00	$61.15
This classification applies to the removal of standing trees, and the trimming and removal of branches and limbs when related to public works construction or site clearance incidental to construction . For apprentice rates see "Apprentice- LABORER"						
LASER BEAM OPERATOR *LABORERS - ZONE 2*	06/01/2020	$34.31	$8.60	$15.77	$0.00	$58.68
	12/01/2020	$35.20	$8.60	$15.77	$0.00	$59.57
	06/01/2021	$36.12	$8.60	$15.77	$0.00	$60.49
	12/01/2021	$37.03	$8.60	$15.77	$0.00	$61.40
For apprentice rates see "Apprentice- LABORER"						
MARBLE & TILE FINISHERS *BRICKLAYERS LOCAL 3 - MARBLE & TILE*	08/01/2020	$42.57	$10.75	$20.27	$0.00	$73.59
	02/01/2021	$43.08	$10.75	$20.27	$0.00	$74.10
	08/01/2021	$44.20	$10.75	$20.43	$0.00	$75.38
	02/01/2022	$44.67	$10.75	$20.43	$0.00	$75.85

Apprentice - *MARBLE & TILE FINISHER - Local 3 Marble & Tile*

Effective Date - 08/01/2020

Step	percent	Apprentice Base Wage	Health	Pension	Supplemental Unemployment	Total Rate
1	50	$21.29	$10.75	$20.27	$0.00	$52.31
2	60	$25.54	$10.75	$20.27	$0.00	$56.56
3	70	$29.80	$10.75	$20.27	$0.00	$60.82
4	80	$34.06	$10.75	$20.27	$0.00	$65.08
5	90	$38.31	$10.75	$20.27	$0.00	$69.33

Effective Date - 02/01/2021

Step	percent	Apprentice Base Wage	Health	Pension	Supplemental Unemployment	Total Rate
1	50	$21.54	$10.75	$20.27	$0.00	$52.56
2	60	$25.85	$10.75	$20.27	$0.00	$56.87
3	70	$30.16	$10.75	$20.27	$0.00	$61.18
4	80	$34.46	$10.75	$20.27	$0.00	$65.48
5	90	$38.77	$10.75	$20.27	$0.00	$69.79

Notes:

Apprentice to Journeyworker Ratio:1:3

MARBLE MASONS,TILELAYERS & TERRAZZO MECH *BRICKLAYERS LOCAL 3 - MARBLE & TILE*	08/01/2020	$55.77	$10.75	$22.08	$0.00	$88.60
	02/01/2021	$56.41	$10.75	$22.08	$0.00	$89.24
	08/01/2021	$57.81	$10.75	$22.24	$0.00	$90.80
	02/01/2022	$58.38	$10.75	$22.24	$0.00	$91.37

Classification	Effective Date	Base Wage	Health	Pension	Supplemental Unemployment	Total Rate

Apprentice - *MARBLE-TILE-TERRAZZO MECHANIC - Local 3 Marble & Tile*

Effective Date - 08/01/2020

Step	percent	Apprentice Base Wage	Health	Pension	Supplemental Unemployment	Total Rate
1	50	$27.89	$10.75	$22.08	$0.00	$60.72
2	60	$33.46	$10.75	$22.08	$0.00	$66.29
3	70	$39.04	$10.75	$22.08	$0.00	$71.87
4	80	$44.62	$10.75	$22.08	$0.00	$77.45
5	90	$50.19	$10.75	$22.08	$0.00	$83.02

Effective Date - 02/01/2021

Step	percent	Apprentice Base Wage	Health	Pension	Supplemental Unemployment	Total Rate
1	50	$28.21	$10.75	$22.08	$0.00	$61.04
2	60	$33.85	$10.75	$22.08	$0.00	$66.68
3	70	$39.49	$10.75	$22.08	$0.00	$72.32
4	80	$45.13	$10.75	$22.08	$0.00	$77.96
5	90	$50.77	$10.75	$22.08	$0.00	$83.60

Notes:

Apprentice to Journeyworker Ratio:1:5

MECH. SWEEPER OPERATOR (ON CONST. SITES) *OPERATING ENGINEERS LOCAL 4*	06/01/2020	$48.81	$13.00	$15.70	$0.00	$77.51
	12/01/2020	$49.95	$13.00	$15.70	$0.00	$78.65
	06/01/2021	$51.04	$13.00	$15.70	$0.00	$79.74
	12/01/2021	$52.18	$13.00	$15.70	$0.00	$80.88
For apprentice rates see "Apprentice- OPERATING ENGINEERS"						
MECHANICS MAINTENANCE *OPERATING ENGINEERS LOCAL 4*	06/01/2020	$48.81	$13.00	$15.70	$0.00	$77.51
	12/01/2020	$49.95	$13.00	$15.70	$0.00	$78.65
	06/01/2021	$51.04	$13.00	$15.70	$0.00	$79.74
	12/01/2021	$52.18	$13.00	$15.70	$0.00	$80.88
For apprentice rates see "Apprentice- OPERATING ENGINEERS"						
MILLWRIGHT (Zone 3) *MILLWRIGHTS LOCAL 1121 - Zone 3*	04/01/2019	$37.11	$9.90	$18.50	$0.00	$65.51

Classification	Effective Date	Base Wage	Health	Pension	Supplemental Unemployment	Total Rate

Apprentice - *MILLWRIGHT - Local 1121 Zone 3*

Effective Date - 04/01/2019

Step	percent	Apprentice Base Wage	Health	Pension	Supplemental Unemployment	Total Rate
1	55	$20.41	$9.90	$5.31	$0.00	$35.62
2	65	$24.12	$9.90	$15.13	$0.00	$49.15
3	75	$27.83	$9.90	$16.10	$0.00	$53.83
4	85	$31.54	$9.90	$17.06	$0.00	$58.50

Notes:

Steps are 2,000 hours

Apprentice to Journeyworker Ratio:1:5

MORTAR MIXER *LABORERS - ZONE 2*	06/01/2020	$34.31	$8.60	$15.77	$0.00	$58.68
	12/01/2020	$35.20	$8.60	$15.77	$0.00	$59.57
	06/01/2021	$36.12	$8.60	$15.77	$0.00	$60.49
	12/01/2021	$37.03	$8.60	$15.77	$0.00	$61.40
For apprentice rates see "Apprentice- LABORER"						
OILER (OTHER THAN TRUCK CRANES,GRADALLS) *OPERATING ENGINEERS LOCAL 4*	06/01/2020	$23.13	$13.00	$15.70	$0.00	$51.83
	12/01/2020	$23.70	$13.00	$15.70	$0.00	$52.40
	06/01/2021	$24.25	$13.00	$15.70	$0.00	$52.95
	12/01/2021	$24.83	$13.00	$15.70	$0.00	$53.53
For apprentice rates see "Apprentice- OPERATING ENGINEERS"						
OILER (TRUCK CRANES, GRADALLS) *OPERATING ENGINEERS LOCAL 4*	06/01/2020	$27.79	$13.00	$15.70	$0.00	$56.49
	12/01/2020	$28.47	$13.00	$15.70	$0.00	$57.17
	06/01/2021	$29.11	$13.00	$15.70	$0.00	$57.81
	12/01/2021	$29.79	$13.00	$15.70	$0.00	$58.49
For apprentice rates see "Apprentice- OPERATING ENGINEERS"						
OTHER POWER DRIVEN EQUIPMENT - CLASS II *OPERATING ENGINEERS LOCAL 4*	06/01/2020	$48.81	$13.00	$15.70	$0.00	$77.51
	12/01/2020	$49.95	$13.00	$15.70	$0.00	$78.65
	06/01/2021	$51.04	$13.00	$15.70	$0.00	$79.74
	12/01/2021	$52.18	$13.00	$15.70	$0.00	$80.88
For apprentice rates see "Apprentice- OPERATING ENGINEERS"						
PAINTER (BRIDGES/TANKS) *PAINTERS LOCAL 35 - ZONE 2*	07/01/2020	$51.51	$8.25	$22.40	$0.00	$82.16
	01/01/2021	$52.06	$8.25	$22.75	$0.00	$83.06

Classification	Effective Date	Base Wage	Health	Pension	Supplemental Unemployment	Total Rate

Apprentice - *PAINTER Local 35 - BRIDGES/TANKS*

Effective Date - 07/01/2020

Step	percent	Apprentice Base Wage	Health	Pension	Supplemental Unemployment	Total Rate
1	50	$25.76	$8.25	$0.00	$0.00	$34.01
2	55	$28.33	$8.25	$6.05	$0.00	$42.63
3	60	$30.91	$8.25	$6.60	$0.00	$45.76
4	65	$33.48	$8.25	$7.15	$0.00	$48.88
5	70	$36.06	$8.25	$19.10	$0.00	$63.41
6	75	$38.63	$8.25	$19.65	$0.00	$66.53
7	80	$41.21	$8.25	$20.20	$0.00	$69.66
8	90	$46.36	$8.25	$21.30	$0.00	$75.91

Effective Date - 01/01/2021

Step	percent	Apprentice Base Wage	Health	Pension	Supplemental Unemployment	Total Rate
1	50	$26.03	$8.25	$0.00	$0.00	$34.28
2	55	$28.63	$8.25	$6.16	$0.00	$43.04
3	60	$31.24	$8.25	$6.72	$0.00	$46.21
4	65	$33.84	$8.25	$7.28	$0.00	$49.37
5	70	$36.44	$8.25	$19.39	$0.00	$64.08
6	75	$39.05	$8.25	$19.95	$0.00	$67.25
7	80	$41.65	$8.25	$20.51	$0.00	$70.41
8	90	$46.85	$8.25	$21.63	$0.00	$76.73

Notes:

Steps are 750 hrs.

Apprentice to Journeyworker Ratio:1:1

PAINTER (SPRAY OR SANDBLAST, NEW) *	07/01/2020	$41.21	$8.25	$22.40	$0.00	$71.86
* If 30% or more of surfaces to be painted are new construction, NEW paint rate shall be used.*PAINTERS LOCAL 35 - ZONE 2*	01/01/2021	$42.96	$8.25	$22.75	$0.00	$73.96

Classification	Effective Date	Base Wage	Health	Pension	Supplemental Unemployment	Total Rate

Apprentice - *PAINTER Local 35 Zone 2 - Spray/Sandblast - New*

Effective Date - 07/01/2020

Step	percent	Apprentice Base Wage	Health	Pension	Supplemental Unemployment	Total Rate
1	50	$20.61	$8.25	$0.00	$0.00	$28.86
2	55	$22.67	$8.25	$6.05	$0.00	$36.97
3	60	$24.73	$8.25	$6.60	$0.00	$39.58
4	65	$26.79	$8.25	$7.15	$0.00	$42.19
5	70	$28.85	$8.25	$19.10	$0.00	$56.20
6	75	$30.91	$8.25	$19.65	$0.00	$58.81
7	80	$32.97	$8.25	$20.20	$0.00	$61.42
8	90	$37.09	$8.25	$21.30	$0.00	$66.64

Effective Date - 01/01/2021

Step	percent	Apprentice Base Wage	Health	Pension	Supplemental Unemployment	Total Rate
1	50	$21.48	$8.25	$0.00	$0.00	$29.73
2	55	$23.63	$8.25	$6.16	$0.00	$38.04
3	60	$25.78	$8.25	$6.72	$0.00	$40.75
4	65	$27.92	$8.25	$7.28	$0.00	$43.45
5	70	$30.07	$8.25	$19.39	$0.00	$57.71
6	75	$32.22	$8.25	$19.95	$0.00	$60.42
7	80	$34.37	$8.25	$20.51	$0.00	$63.13
8	90	$38.66	$8.25	$21.63	$0.00	$68.54

Notes:

Steps are 750 hrs.

Apprentice to Journeyworker Ratio:1:1

PAINTER (SPRAY OR SANDBLAST, REPAINT) *PAINTERS LOCAL 35 - ZONE 2*	07/01/2020	$40.47	$8.25	$22.40	$0.00	$71.12
	01/01/2021	$41.02	$8.25	$22.75	$0.00	$72.02

Classification	Effective Date	Base Wage	Health	Pension	Supplemental Unemployment	Total Rate

Apprentice - *PAINTER Local 35 Zone 2 - Spray/Sandblast - Repaint*

Effective Date - 07/01/2020

Step	percent	Apprentice Base Wage	Health	Pension	Supplemental Unemployment	Total Rate
1	50	$20.24	$8.25	$0.00	$0.00	$28.49
2	55	$22.26	$8.25	$6.05	$0.00	$36.56
3	60	$24.28	$8.25	$6.60	$0.00	$39.13
4	65	$26.31	$8.25	$7.15	$0.00	$41.71
5	70	$28.33	$8.25	$19.10	$0.00	$55.68
6	75	$30.35	$8.25	$19.65	$0.00	$58.25
7	80	$32.38	$8.25	$20.20	$0.00	$60.83
8	90	$36.42	$8.25	$21.30	$0.00	$65.97

Effective Date - 01/01/2021

Step	percent	Apprentice Base Wage	Health	Pension	Supplemental Unemployment	Total Rate
1	50	$20.51	$8.25	$0.00	$0.00	$28.76
2	55	$22.56	$8.25	$6.16	$0.00	$36.97
3	60	$24.61	$8.25	$6.72	$0.00	$39.58
4	65	$26.66	$8.25	$7.28	$0.00	$42.19
5	70	$28.71	$8.25	$19.39	$0.00	$56.35
6	75	$30.77	$8.25	$19.95	$0.00	$58.97
7	80	$32.82	$8.25	$20.51	$0.00	$61.58
8	90	$36.92	$8.25	$21.63	$0.00	$66.80

Notes:

Steps are 750 hrs.

Apprentice to Journeyworker Ratio:1:1

PAINTER (TRAFFIC MARKINGS) *LABORERS - ZONE 2*	06/01/2020	$34.06	$8.60	$15.77	$0.00	$58.43
	12/01/2020	$34.95	$8.60	$15.77	$0.00	$59.32
	06/01/2021	$35.87	$8.60	$15.77	$0.00	$60.24
	12/01/2021	$36.78	$8.60	$15.77	$0.00	$61.15
For Apprentice rates see "Apprentice- LABORER"						
PAINTER / TAPER (BRUSH, NEW) * * If 30% or more of surfaces to be painted are new construction, NEW paint rate shall be used.*PAINTERS LOCAL 35 - ZONE 2*	07/01/2020	$41.01	$8.25	$22.40	$0.00	$71.66
	01/01/2021	$41.56	$8.25	$22.75	$0.00	$72.56

Classification	Effective Date	Base Wage	Health	Pension	Supplemental Unemployment	Total Rate

Apprentice - *PAINTER - Local 35 Zone 2 - BRUSH NEW*

Effective Date - 07/01/2020

Step	percent	Apprentice Base Wage	Health	Pension	Supplemental Unemployment	Total Rate
1	50	$20.51	$8.25	$0.00	$0.00	$28.76
2	55	$22.56	$8.25	$6.05	$0.00	$36.86
3	60	$24.61	$8.25	$6.60	$0.00	$39.46
4	65	$26.66	$8.25	$7.15	$0.00	$42.06
5	70	$28.71	$8.25	$19.10	$0.00	$56.06
6	75	$30.76	$8.25	$19.65	$0.00	$58.66
7	80	$32.81	$8.25	$20.20	$0.00	$61.26
8	90	$36.91	$8.25	$21.30	$0.00	$66.46

Effective Date - 01/01/2021

Step	percent	Apprentice Base Wage	Health	Pension	Supplemental Unemployment	Total Rate
1	50	$20.78	$8.25	$0.00	$0.00	$29.03
2	55	$22.86	$8.25	$6.16	$0.00	$37.27
3	60	$24.94	$8.25	$6.72	$0.00	$39.91
4	65	$27.01	$8.25	$7.28	$0.00	$42.54
5	70	$29.09	$8.25	$19.39	$0.00	$56.73
6	75	$31.17	$8.25	$19.95	$0.00	$59.37
7	80	$33.25	$8.25	$20.51	$0.00	$62.01
8	90	$37.40	$8.25	$21.63	$0.00	$67.28

Notes:

Steps are 750 hrs.

Apprentice to Journeyworker Ratio:1:1

PAINTER / TAPER (BRUSH, REPAINT) *PAINTERS LOCAL 35 - ZONE 2*	07/01/2020	$39.07	$8.25	$22.40	$0.00	$69.72
	01/01/2021	$39.62	$8.25	$22.75	$0.00	$70.62

Classification	Effective Date	Base Wage	Health	Pension	Supplemental Unemployment	Total Rate

Apprentice - *PAINTER Local 35 Zone 2 - BRUSH REPAINT*

Effective Date - 07/01/2020

Step	percent	Apprentice Base Wage	Health	Pension	Supplemental Unemployment	Total Rate
1	50	$19.54	$8.25	$0.00	$0.00	$27.79
2	55	$21.49	$8.25	$6.05	$0.00	$35.79
3	60	$23.44	$8.25	$6.60	$0.00	$38.29
4	65	$25.40	$8.25	$7.15	$0.00	$40.80
5	70	$27.35	$8.25	$19.10	$0.00	$54.70
6	75	$29.30	$8.25	$19.65	$0.00	$57.20
7	80	$31.26	$8.25	$20.20	$0.00	$59.71
8	90	$35.16	$8.25	$21.30	$0.00	$64.71

Effective Date - 01/01/2021

Step	percent	Apprentice Base Wage	Health	Pension	Supplemental Unemployment	Total Rate
1	50	$19.81	$8.25	$0.00	$0.00	$28.06
2	55	$21.79	$8.25	$6.16	$0.00	$36.20
3	60	$23.77	$8.25	$6.72	$0.00	$38.74
4	65	$25.75	$8.25	$7.28	$0.00	$41.28
5	70	$27.73	$8.25	$19.39	$0.00	$55.37
6	75	$29.72	$8.25	$19.95	$0.00	$57.92
7	80	$31.70	$8.25	$20.51	$0.00	$60.46
8	90	$35.66	$8.25	$21.63	$0.00	$65.54

Notes:

Steps are 750 hrs.

Apprentice to Journeyworker Ratio:1:1

PANEL & PICKUP TRUCKS DRIVER *TEAMSTERS JOINT COUNCIL NO. 10 ZONE B*	08/01/2020	$34.98	$12.91	$13.72	$0.00	$61.61
	12/01/2020	$34.98	$12.91	$14.82	$0.00	$62.71
	06/01/2021	$35.78	$12.91	$14.82	$0.00	$63.51
	08/01/2021	$35.78	$13.41	$14.82	$0.00	$64.01
	12/01/2021	$35.78	$13.41	$16.01	$0.00	$65.20
PIER AND DOCK CONSTRUCTOR (UNDERPINNING AND DECK) *PILE DRIVER LOCAL 56 (ZONE 2)* For apprentice rates see "Apprentice- PILE DRIVER"	08/01/2020	$46.11	$9.40	$23.12	$0.00	$78.63
PILE DRIVER *PILE DRIVER LOCAL 56 (ZONE 2)*	08/01/2020	$46.11	$9.40	$23.12	$0.00	$78.63

Classification	Effective Date	Base Wage	Health	Pension	Supplemental Unemployment	Total Rate

Apprentice - *PILE DRIVER - Local 56 Zone 2*

Effective Date - 08/01/2020

Step	percent	Apprentice Base Wage	Health	Pension	Supplemental Unemployment	Total Rate
1	0	$0.00	$0.00	$0.00	$0.00	$0.00

Notes: Apprentice wages shall be no less than the following Steps;
(Same as set in Zone 1)
1$57.06/2$61.96/3$66.87/4$69.32/5$71.78/6$71.78/7$76.68/8$76.68

Apprentice to Journeyworker Ratio:1:5

PIPELAYER *LABORERS - ZONE 2*	06/01/2020	$34.31	$8.60	$15.77	$0.00	$58.68
	12/01/2020	$35.20	$8.60	$15.77	$0.00	$59.57
	06/01/2021	$36.12	$8.60	$15.77	$0.00	$60.49
	12/01/2021	$37.03	$8.60	$15.77	$0.00	$61.40

For apprentice rates see "Apprentice- LABORER"

PLUMBER & PIPEFITTER *PLUMBERS LOCAL 4*	09/01/2020	$46.91	$9.80	$15.71	$0.00	$72.42
	03/01/2021	$47.91	$9.80	$15.71	$0.00	$73.42
	09/01/2021	$48.91	$9.80	$15.71	$0.00	$74.42
	03/01/2022	$49.91	$9.80	$15.71	$0.00	$75.42

Apprentice - *PLUMBER/PIPEFITTER - Local 4*

Effective Date - 09/01/2020

Step	percent	Apprentice Base Wage	Health	Pension	Supplemental Unemployment	Total Rate
1	40	$18.76	$9.80	$0.00	$0.00	$28.56
2	50	$23.46	$9.80	$0.00	$0.00	$33.26
3	60	$28.15	$9.80	$0.00	$0.00	$37.95
4	70	$32.84	$9.80	$6.00	$0.00	$48.64
5	80	$37.53	$9.80	$6.00	$0.00	$53.33

Effective Date - 03/01/2021

Step	percent	Apprentice Base Wage	Health	Pension	Supplemental Unemployment	Total Rate
1	40	$19.16	$9.80	$0.00	$0.00	$28.96
2	50	$23.96	$9.80	$0.00	$0.00	$33.76
3	60	$28.75	$9.80	$0.00	$0.00	$38.55
4	70	$33.54	$9.80	$6.00	$0.00	$49.34
5	80	$38.33	$9.80	$6.00	$0.00	$54.13

Notes:
Steps - 2000 hrs; Step 4 w/lic 75%, Step 5 w/lic 85%
Step 4 w/lic $50.98, Step 5 w/lic $55.67

Apprentice to Journeyworker Ratio:1:3

PNEUMATIC CONTROLS (TEMP.) *PLUMBERS LOCAL 4*	09/01/2020	$46.91	$9.80	$15.71	$0.00	$72.42
	03/01/2021	$47.91	$9.80	$15.71	$0.00	$73.42
	09/01/2021	$48.91	$9.80	$15.71	$0.00	$74.42
	03/01/2022	$49.91	$9.80	$15.71	$0.00	$75.42

For apprentice rates see "Apprentice- PIPEFITTER" or "PLUMBER/PIPEFITTER"

Classification	Effective Date	Base Wage	Health	Pension	Supplemental Unemployment	Total Rate
PNEUMATIC DRILL/TOOL OPERATOR *LABORERS - ZONE 2*	06/01/2020	$34.31	$8.60	$15.77	$0.00	$58.68
	12/01/2020	$35.20	$8.60	$15.77	$0.00	$59.57
	06/01/2021	$36.12	$8.60	$15.77	$0.00	$60.49
	12/01/2021	$37.03	$8.60	$15.77	$0.00	$61.40
For apprentice rates see "Apprentice- LABORER"						
POWDERMAN & BLASTER *LABORERS - ZONE 2*	06/01/2020	$35.06	$8.60	$15.77	$0.00	$59.43
	12/01/2020	$35.95	$8.60	$15.77	$0.00	$60.32
	06/01/2021	$36.87	$8.60	$15.77	$0.00	$61.24
	12/01/2021	$37.78	$8.60	$15.77	$0.00	$62.15
For apprentice rates see "Apprentice- LABORER"						
POWER SHOVEL/DERRICK/TRENCHING MACHINE *OPERATING ENGINEERS LOCAL 4*	06/01/2020	$49.33	$13.00	$15.70	$0.00	$78.03
	12/01/2020	$50.48	$13.00	$15.70	$0.00	$79.18
	06/01/2021	$51.58	$13.00	$15.70	$0.00	$80.28
	12/01/2021	$52.73	$13.00	$15.70	$0.00	$81.43
For apprentice rates see "Apprentice- OPERATING ENGINEERS"						
PUMP OPERATOR (CONCRETE) *OPERATING ENGINEERS LOCAL 4*	06/01/2020	$49.33	$13.00	$15.70	$0.00	$78.03
	12/01/2020	$50.48	$13.00	$15.70	$0.00	$79.18
	06/01/2021	$51.58	$13.00	$15.70	$0.00	$80.28
	12/01/2021	$52.73	$13.00	$15.70	$0.00	$81.43
For apprentice rates see "Apprentice- OPERATING ENGINEERS"						
PUMP OPERATOR (DEWATERING, OTHER) *OPERATING ENGINEERS LOCAL 4*	06/01/2020	$32.72	$13.00	$15.70	$0.00	$61.42
	12/01/2020	$33.50	$13.00	$15.70	$0.00	$62.20
	06/01/2021	$34.25	$13.00	$15.70	$0.00	$62.95
	12/01/2021	$35.04	$13.00	$15.70	$0.00	$63.74
For apprentice rates see "Apprentice- OPERATING ENGINEERS"						
READY-MIX CONCRETE DRIVER *TEAMSTERS 170 -J.G.MacLellan (Lunnenburg)*	01/01/2020	$24.64	$9.65	$8.00	$0.00	$42.29
	01/01/2021	$24.64	$10.01	$8.00	$0.00	$42.65
	02/02/2021	$24.84	$10.01	$8.00	$0.00	$42.85
	01/01/2022	$24.84	$10.37	$8.00	$0.00	$43.21
	02/02/2022	$25.04	$10.37	$8.00	$0.00	$43.41
	01/01/2023	$25.04	$10.77	$8.00	$0.00	$43.81
	02/02/2023	$25.29	$10.77	$8.00	$0.00	$44.06
	01/01/2024	$25.29	$11.17	$0.00	$0.00	$36.46
RECLAIMERS *OPERATING ENGINEERS LOCAL 4*	06/01/2020	$48.81	$13.00	$15.70	$0.00	$77.51
	12/01/2020	$49.95	$13.00	$15.70	$0.00	$78.65
	06/01/2021	$51.04	$13.00	$15.70	$0.00	$79.74
	12/01/2021	$52.18	$13.00	$15.70	$0.00	$80.88
For apprentice rates see "Apprentice- OPERATING ENGINEERS"						
RIDE-ON MOTORIZED BUGGY OPERATOR *LABORERS - ZONE 2*	06/01/2020	$34.31	$8.60	$15.77	$0.00	$58.68
	12/01/2020	$35.20	$8.60	$15.77	$0.00	$59.57
	06/01/2021	$36.12	$8.60	$15.77	$0.00	$60.49
	12/01/2021	$37.03	$8.60	$15.77	$0.00	$61.40
For apprentice rates see "Apprentice- LABORER"						
ROLLER/SPREADER/MULCHING MACHINE *OPERATING ENGINEERS LOCAL 4*	06/01/2020	$48.81	$13.00	$15.70	$0.00	$77.51
	12/01/2020	$49.95	$13.00	$15.70	$0.00	$78.65
	06/01/2021	$51.04	$13.00	$15.70	$0.00	$79.74
	12/01/2021	$52.18	$13.00	$15.70	$0.00	$80.88

Classification	Effective Date	Base Wage	Health	Pension	Supplemental Unemployment	Total Rate
For apprentice rates see "Apprentice- OPERATING ENGINEERS"						
ROOFER (Inc.Roofer Waterproofng &Roofer Damproofg) *ROOFERS LOCAL 33*	08/01/2020	$46.60	$11.75	$16.15	$0.00	$74.50
	02/01/2021	$48.03	$11.75	$16.15	$0.00	$75.93
	08/01/2021	$49.46	$11.75	$16.15	$0.00	$77.36
	02/01/2022	$50.89	$11.75	$16.15	$0.00	$78.79

Apprentice - *ROOFER - Local 33*

Effective Date - 08/01/2020

Step	percent	Apprentice Base Wage	Health	Pension	Supplemental Unemployment	Total Rate
1	50	$23.30	$11.75	$3.81	$0.00	$38.86
2	60	$27.96	$11.75	$16.15	$0.00	$55.86
3	65	$30.29	$11.75	$16.15	$0.00	$58.19
4	75	$34.95	$11.75	$16.15	$0.00	$62.85
5	85	$39.61	$11.75	$16.15	$0.00	$67.51

Effective Date - 02/01/2021

Step	percent	Apprentice Base Wage	Health	Pension	Supplemental Unemployment	Total Rate
1	50	$24.02	$11.75	$3.81	$0.00	$39.58
2	60	$28.82	$11.75	$16.15	$0.00	$56.72
3	65	$31.22	$11.75	$16.15	$0.00	$59.12
4	75	$36.02	$11.75	$16.15	$0.00	$63.92
5	85	$40.83	$11.75	$16.15	$0.00	$68.73

Notes: ** 1:5, 2:6-10, the 1:10; Reroofing: 1:4, then 1:1
Step 1 is 2000 hrs.; Steps 2-5 are 1000 hrs.
(Hot Pitch Mechanics' receive $1.00 hr. above ROOFER)

Apprentice to Journeyworker Ratio:**

ROOFER SLATE / TILE / PRECAST CONCRETE *ROOFERS LOCAL 33*	08/01/2020	$46.85	$11.75	$16.15	$0.00	$74.75
	02/01/2021	$48.28	$11.75	$16.15	$0.00	$76.18
	08/01/2021	$49.71	$11.75	$16.15	$0.00	$77.61
	02/01/2022	$51.14	$11.75	$16.15	$0.00	$79.04
For apprentice rates see "Apprentice- ROOFER"						
SHEETMETAL WORKER *SHEETMETAL WORKERS LOCAL 63*	01/01/2020	$36.99	$10.64	$16.22	$1.77	$65.62

Classification	Effective Date	Base Wage	Health	Pension	Supplemental Unemployment	Total Rate

Apprentice - *SHEET METAL WORKER - Local 63*

Effective Date - 01/01/2020

Step	percent	Apprentice Base Wage	Health	Pension	Supplemental Unemployment	Total Rate
1	45	$16.65	$6.21	$4.67	$0.00	$27.53
2	50	$18.50	$6.55	$5.19	$0.00	$30.24
3	55	$20.34	$6.88	$9.33	$1.08	$37.63
4	60	$22.19	$7.22	$9.33	$1.14	$39.88
5	65	$24.04	$7.55	$9.33	$1.20	$42.12
6	70	$25.89	$7.88	$9.33	$1.27	$44.37
7	75	$27.74	$8.22	$9.33	$1.33	$46.62
8	80	$29.59	$9.30	$15.18	$1.59	$55.66
9	85	$31.44	$9.64	$15.18	$1.66	$57.92
10	90	$33.29	$9.98	$15.18	$1.72	$60.17

Notes:

Apprentice to Journeyworker Ratio:1:3

SPECIALIZED EARTH MOVING EQUIP < 35 TONS *TEAMSTERS JOINT COUNCIL NO. 10 ZONE B*	08/01/2020	$35.44	$12.91	$13.72	$0.00	$62.07
	12/01/2020	$35.44	$12.91	$14.82	$0.00	$63.17
	06/01/2021	$36.24	$12.91	$14.82	$0.00	$63.97
	08/01/2021	$36.24	$13.41	$14.82	$0.00	$64.47
	12/01/2021	$36.24	$13.41	$16.01	$0.00	$65.66
SPECIALIZED EARTH MOVING EQUIP > 35 TONS *TEAMSTERS JOINT COUNCIL NO. 10 ZONE B*	08/01/2020	$35.73	$12.91	$13.72	$0.00	$62.36
	12/01/2020	$35.73	$12.91	$14.82	$0.00	$63.46
	06/01/2021	$36.53	$12.91	$14.82	$0.00	$64.26
	08/01/2021	$36.53	$13.41	$14.82	$0.00	$64.76
	12/01/2021	$36.53	$13.41	$16.01	$0.00	$65.95
SPRINKLER FITTER *SPRINKLER FITTERS LOCAL 669*	01/01/2019	$41.51	$10.02	$13.08	$0.00	$64.61

Classification	Effective Date	Base Wage	Health	Pension	Supplemental Unemployment	Total Rate

Apprentice - *SPRINKLER FITTER - Local 669*

Effective Date - 01/01/2019

Step	percent	Apprentice Base Wage	Health	Pension	Supplemental Unemployment	Total Rate
1	45	$18.68	$7.75	$0.00	$0.00	$26.43
2	50	$20.76	$7.75	$0.00	$0.00	$28.51
3	55	$22.83	$10.02	$7.25	$0.00	$40.10
4	60	$24.91	$10.02	$7.25	$0.00	$42.18
5	65	$26.98	$10.02	$7.50	$0.00	$44.50
6	70	$29.06	$10.02	$7.50	$0.00	$46.58
7	75	$31.13	$10.02	$7.50	$0.00	$48.65
8	80	$33.21	$10.02	$7.50	$0.00	$50.73
9	85	$35.28	$10.02	$7.50	$0.00	$52.80
10	90	$37.36	$10.02	$7.50	$0.00	$54.88

Notes:

Apprentice to Journeyworker Ratio:1:1

STEAM BOILER OPERATOR *OPERATING ENGINEERS LOCAL 4*	06/01/2020	$48.81	$13.00	$15.70	$0.00	$77.51
	12/01/2020	$49.95	$13.00	$15.70	$0.00	$78.65
	06/01/2021	$51.04	$13.00	$15.70	$0.00	$79.74
	12/01/2021	$52.18	$13.00	$15.70	$0.00	$80.88
For apprentice rates see "Apprentice- OPERATING ENGINEERS"						
TAMPERS, SELF-PROPELLED OR TRACTOR DRAWN *OPERATING ENGINEERS LOCAL 4*	06/01/2020	$48.81	$13.00	$15.70	$0.00	$77.51
	12/01/2020	$49.95	$13.00	$15.70	$0.00	$78.65
	06/01/2021	$51.04	$13.00	$15.70	$0.00	$79.74
	12/01/2021	$52.18	$13.00	$15.70	$0.00	$80.88
For apprentice rates see "Apprentice- OPERATING ENGINEERS"						
TERRAZZO FINISHERS *BRICKLAYERS LOCAL 3 - MARBLE & TILE*	08/01/2020	$54.69	$10.75	$22.09	$0.00	$87.53
	02/01/2021	$55.33	$10.75	$22.09	$0.00	$88.17
	08/01/2021	$56.73	$10.75	$22.25	$0.00	$89.73
	02/01/2022	$57.32	$10.75	$22.25	$0.00	$90.32

Classification	Effective Date	Base Wage	Health	Pension	Supplemental Unemployment	Total Rate

Apprentice - *TERRAZZO FINISHER - Local 3 Marble & Tile*

Effective Date - 08/01/2020

Step	percent	Apprentice Base Wage	Health	Pension	Supplemental Unemployment	Total Rate
1	50	$27.35	$10.75	$22.09	$0.00	$60.19
2	60	$32.81	$10.75	$22.09	$0.00	$65.65
3	70	$38.28	$10.75	$22.09	$0.00	$71.12
4	80	$43.75	$10.75	$22.09	$0.00	$76.59
5	90	$49.22	$10.75	$22.09	$0.00	$82.06

Effective Date - 02/01/2021

Step	percent	Apprentice Base Wage	Health	Pension	Supplemental Unemployment	Total Rate
1	50	$27.67	$10.75	$22.09	$0.00	$60.51
2	60	$33.20	$10.75	$22.09	$0.00	$66.04
3	70	$38.73	$10.75	$22.09	$0.00	$71.57
4	80	$44.26	$10.75	$22.09	$0.00	$77.10
5	90	$49.80	$10.75	$22.09	$0.00	$82.64

Notes:

Apprentice to Journeyworker Ratio:1:3

TEST BORING DRILLER *LABORERS - FOUNDATION AND MARINE*	06/01/2020	$40.55	$8.60	$17.24	$0.00	$66.39
	12/01/2020	$41.53	$8.60	$17.24	$0.00	$67.37
	06/01/2021	$42.55	$8.60	$17.24	$0.00	$68.39
	12/01/2021	$43.56	$8.60	$17.24	$0.00	$69.40
For apprentice rates see "Apprentice- LABORER"						
TEST BORING DRILLER HELPER *LABORERS - FOUNDATION AND MARINE*	06/01/2020	$39.27	$8.60	$17.24	$0.00	$65.11
	12/01/2020	$40.25	$8.60	$17.24	$0.00	$66.09
	06/01/2021	$41.27	$8.60	$17.24	$0.00	$67.11
	12/01/2021	$42.28	$8.60	$17.24	$0.00	$68.12
For apprentice rates see "Apprentice- LABORER"						
TEST BORING LABORER *LABORERS - FOUNDATION AND MARINE*	06/01/2020	$39.15	$8.60	$17.24	$0.00	$64.99
	12/01/2020	$40.13	$8.60	$17.24	$0.00	$65.97
	06/01/2021	$41.15	$8.60	$17.24	$0.00	$66.99
	12/01/2021	$42.16	$8.60	$17.24	$0.00	$68.00
For apprentice rates see "Apprentice- LABORER"						
TRACTORS/PORTABLE STEAM GENERATORS *OPERATING ENGINEERS LOCAL 4*	06/01/2020	$48.81	$13.00	$15.70	$0.00	$77.51
	12/01/2020	$49.95	$13.00	$15.70	$0.00	$78.65
	06/01/2021	$51.04	$13.00	$15.70	$0.00	$79.74
	12/01/2021	$52.18	$13.00	$15.70	$0.00	$80.88
For apprentice rates see "Apprentice- OPERATING ENGINEERS"						

Classification	Effective Date	Base Wage	Health	Pension	Supplemental Unemployment	Total Rate
TRAILERS FOR EARTH MOVING EQUIPMENT *TEAMSTERS JOINT COUNCIL NO. 10 ZONE B*	08/01/2020	$36.02	$12.91	$13.72	$0.00	$62.65
	12/01/2020	$36.02	$12.91	$14.82	$0.00	$63.75
	06/01/2021	$36.82	$12.91	$14.82	$0.00	$64.55
	08/01/2021	$36.82	$13.41	$14.82	$0.00	$65.05
	12/01/2021	$36.82	$13.41	$16.01	$0.00	$66.24
TUNNEL WORK - COMPRESSED AIR *LABORERS (COMPRESSED AIR)*	06/01/2020	$51.38	$8.60	$17.69	$0.00	$77.67
	12/01/2020	$52.36	$8.60	$17.69	$0.00	$78.65
	06/01/2021	$53.38	$8.60	$17.69	$0.00	$79.67
	12/01/2021	$54.39	$8.60	$17.69	$0.00	$80.68
For apprentice rates see "Apprentice- LABORER"						
TUNNEL WORK - COMPRESSED AIR (HAZ. WASTE) *LABORERS (COMPRESSED AIR)*	06/01/2020	$53.38	$8.60	$17.69	$0.00	$79.67
	12/01/2020	$54.36	$8.60	$17.69	$0.00	$80.65
	06/01/2021	$55.38	$8.60	$17.69	$0.00	$81.67
	12/01/2021	$56.39	$8.60	$17.69	$0.00	$82.68
For apprentice rates see "Apprentice- LABORER"						
TUNNEL WORK - FREE AIR *LABORERS (FREE AIR TUNNEL)*	06/01/2020	$43.45	$8.60	$17.69	$0.00	$69.74
	12/01/2020	$44.43	$8.60	$17.69	$0.00	$70.72
	06/01/2021	$45.45	$8.60	$17.69	$0.00	$71.74
	12/01/2021	$46.46	$8.60	$17.69	$0.00	$72.75
For apprentice rates see "Apprentice- LABORER"						
TUNNEL WORK - FREE AIR (HAZ. WASTE) *LABORERS (FREE AIR TUNNEL)*	06/01/2020	$45.45	$8.60	$17.69	$0.00	$71.74
	12/01/2020	$46.43	$8.60	$17.69	$0.00	$72.72
	06/01/2021	$47.45	$8.60	$17.69	$0.00	$73.74
	12/01/2021	$48.46	$8.60	$17.69	$0.00	$74.75
For apprentice rates see "Apprentice- LABORER"						
VAC-HAUL *TEAMSTERS JOINT COUNCIL NO. 10 ZONE B*	08/01/2020	$35.44	$12.91	$13.72	$0.00	$62.07
	12/01/2020	$35.44	$12.91	$14.82	$0.00	$63.17
	06/01/2021	$36.24	$12.91	$14.82	$0.00	$63.97
	08/01/2021	$36.24	$13.41	$14.82	$0.00	$64.47
	12/01/2021	$36.24	$13.41	$16.01	$0.00	$65.66
VOICE-DATA-VIDEO TECHNICIAN *ELECTRICIANS LOCAL 96*	09/06/2020	$31.54	$11.13	$15.54	$0.00	$58.21
	09/05/2021	$32.86	$11.57	$15.72	$0.00	$60.15
	09/04/2022	$34.19	$12.20	$15.91	$0.00	$62.30

Classification	Effective Date	Base Wage	Health	Pension	Supplemental Unemployment	Total Rate

Apprentice - *VOICE-DATA-VIDEO TECHNICIAN - Local 96*

Effective Date - 09/06/2020

Step	percent	Apprentice Base Wage	Health	Pension	Supplemental Unemployment	Total Rate
1	50	$15.77	$11.13	$3.94	$0.00	$30.84
2	55	$17.35	$11.13	$3.99	$0.00	$32.47
3	60	$18.92	$11.13	$15.16	$0.00	$45.21
4	65	$20.50	$11.13	$15.21	$0.00	$46.84
5	70	$22.08	$11.13	$15.25	$0.00	$48.46
6	75	$23.66	$11.13	$15.30	$0.00	$50.09
7	80	$25.23	$11.13	$15.35	$0.00	$51.71
8	85	$26.81	$11.13	$15.39	$0.00	$53.33

Notes:

Apprentice to Journeyworker Ratio:1:1

WAGON DRILL OPERATOR *LABORERS - ZONE 2*	06/01/2020	$34.31	$8.60	$15.77	$0.00	$58.68
	12/01/2020	$35.20	$8.60	$15.77	$0.00	$59.57
	06/01/2021	$36.12	$8.60	$15.77	$0.00	$60.49
	12/01/2021	$37.03	$8.60	$15.77	$0.00	$61.40
For apprentice rates see "Apprentice- LABORER"						
WASTE WATER PUMP OPERATOR *OPERATING ENGINEERS LOCAL 4*	06/01/2020	$49.33	$13.00	$15.70	$0.00	$78.03
	12/01/2020	$50.48	$13.00	$15.70	$0.00	$79.18
	06/01/2021	$51.58	$13.00	$15.70	$0.00	$80.28
	12/01/2021	$52.73	$13.00	$15.70	$0.00	$81.43
For apprentice rates see "Apprentice- OPERATING ENGINEERS"						
WATER METER INSTALLER *PLUMBERS LOCAL 4*	09/01/2020	$46.91	$9.80	$15.71	$0.00	$72.42
	03/01/2021	$47.91	$9.80	$15.71	$0.00	$73.42
	09/01/2021	$48.91	$9.80	$15.71	$0.00	$74.42
	03/01/2022	$49.91	$9.80	$15.71	$0.00	$75.42
For apprentice rates see "Apprentice- PLUMBER/PIPEFITTER" or "PLUMBER/GASFITTER"						

Outside Electrical - East

CABLE TECHNICIAN (Power Zone) *OUTSIDE ELECTRICAL WORKERS - EAST LOCAL 104*	08/30/2020	$29.67	$9.25	$1.89	$0.00	$40.81
For apprentice rates see "Apprentice- LINEMAN"						
CABLEMAN (Underground Ducts & Cables) *OUTSIDE ELECTRICAL WORKERS - EAST LOCAL 104*	08/30/2020	$42.03	$9.25	$10.27	$0.00	$61.55
For apprentice rates see "Apprentice- LINEMAN"						
DRIVER / GROUNDMAN CDL *OUTSIDE ELECTRICAL WORKERS - EAST LOCAL 104*	08/30/2020	$34.62	$9.25	$10.07	$0.00	$53.94
For apprentice rates see "Apprentice- LINEMAN"						
DRIVER / GROUNDMAN -Inexperienced (<2000 Hrs) *OUTSIDE ELECTRICAL WORKERS - EAST LOCAL 104*	08/30/2020	$27.20	$9.25	$1.82	$0.00	$38.27
For apprentice rates see "Apprentice- LINEMAN"						
EQUIPMENT OPERATOR (Class A CDL) *OUTSIDE ELECTRICAL WORKERS - EAST LOCAL 104*	08/30/2020	$42.03	$9.25	$14.35	$0.00	$65.63
For apprentice rates see "Apprentice- LINEMAN"						

Classification	Effective Date	Base Wage	Health	Pension	Supplemental Unemployment	Total Rate
EQUIPMENT OPERATOR (Class B CDL) *OUTSIDE ELECTRICAL WORKERS - EAST LOCAL 104* For apprentice rates see "Apprentice- LINEMAN"	08/30/2020	$37.09	$9.25	$10.87	$0.00	$57.21
GROUNDMAN *OUTSIDE ELECTRICAL WORKERS - EAST LOCAL 104* For apprentice rates see "Apprentice- LINEMAN"	08/30/2020	$22.25	$9.25	$1.67	$0.00	$33.17
GROUNDMAN -Inexperienced (<2000 Hrs.) *OUTSIDE ELECTRICAL WORKERS - EAST LOCAL 104* For apprentice rates see "Apprentice- LINEMAN"	08/30/2020	$27.20	$9.25	$1.82	$0.00	$38.27
JOURNEYMAN LINEMAN *OUTSIDE ELECTRICAL WORKERS - EAST LOCAL 104*	08/30/2020	$49.45	$9.25	$17.48	$0.00	$76.18

Apprentice - *LINEMAN (Outside Electrical) - East Local 104*

Effective Date - 08/30/2020

Step	percent	Apprentice Base Wage	Health	Pension	Supplemental Unemployment	Total Rate
1	60	$29.67	$9.25	$3.39	$0.00	$42.31
2	65	$32.14	$9.25	$3.46	$0.00	$44.85
3	70	$34.62	$9.25	$3.54	$0.00	$47.41
4	75	$37.09	$9.25	$5.11	$0.00	$51.45
5	80	$39.56	$9.25	$5.19	$0.00	$54.00
6	85	$42.03	$9.25	$5.26	$0.00	$56.54
7	90	$44.51	$9.25	$7.34	$0.00	$61.10

Notes:

Apprentice to Journeyworker Ratio:1:2

TELEDATA CABLE SPLICER *OUTSIDE ELECTRICAL WORKERS - EAST LOCAL 104*	02/04/2019	$30.73	$4.70	$3.17	$0.00	$38.60
TELEDATA LINEMAN/EQUIPMENT OPERATOR *OUTSIDE ELECTRICAL WORKERS - EAST LOCAL 104*	02/04/2019	$28.93	$4.70	$3.14	$0.00	$36.77
TELEDATA WIREMAN/INSTALLER/TECHNICIAN *OUTSIDE ELECTRICAL WORKERS - EAST LOCAL 104*	02/04/2019	$28.93	$4.70	$3.14	$0.00	$36.77

Additional Apprentice Information:

Minimum wage rates for apprentices employed on public works projects are listed above as a percentage of the pre-determined hourly wage rate established by the Commissioner under the provisions of the M.G.L. c. 149, ss. 26-27D. Apprentice ratios are established by the Division of Apprenticeship Training pursuant to M.G.L. c. 23, ss. 11E-11L.

All apprentices must be registered with the Division of Apprenticeship Training in accordance with M.G.L. c. 23, ss. 11E-11L.

All steps are six months (1000 hours.)
Ratios are expressed in allowable number of apprentices to journeymen or fraction thereof, unless otherwise specified.

** Multiple ratios are listed in the comment field.
*** APP to JM; 1:1, 2:2, 2:3, 3:4, 4:4, 4:5, 4:6, 5:7, 6:7, 6:8, 6:9, 7:10, 8:10, 8:11, 8:12, 9:13, 10:13, 10:14, etc.
**** APP to JM; 1:1, 1:2, 2:3, 2:4, 3:5, 4:6, 4:7, 5:8, 6:9, 6:10, 7:11, 8:12, 8:13, 9:14, 10:15, 10:16, etc.